BRADCO

PALADIN
LIGHT CONSTRUCTION GROUP

BRADCO
FFC
HARLEY
McMILLEN
SWEEPSTER

The Power of Combined Excellence

Grapples & Trash Clamp Buckets

For Compact Wheel Loaders, Telehandlers, Tractor Loader Backhoes with quick attach systems

FEATURES:

- provides the most cost effective and efficient way to complete your job
- manufactured with high quality, ensuring a long and productive life
- 1 year warranty

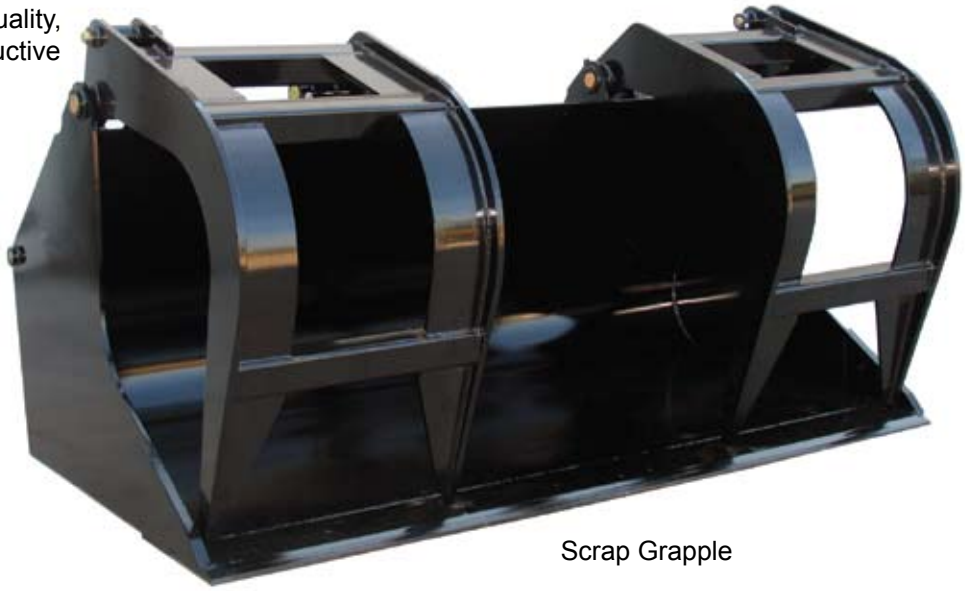

Scrap Grapple

Brush Grapple

Trash Clamp

Grapples & Trash Clamp Buckets

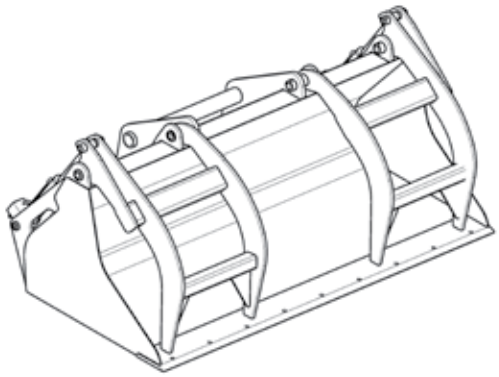

FEATURES:

- Rolled shell for easy filling and clean up
- Full cross member torque tubes top and bottom for long term durability
- Abrasion resistant cutting edge with punched holes for optional bolt-on edge
- Skid plates under bucket shell for improved wear
- Capacities from 1 cubic yard to 3.25 cubic yard
- PO check valve for positive lock on material
- Optional bolt-on cutting edges
- 1 year warranty

Specifications	Minimum	Maximum
A. Overall height	varies depending upon cubic capacity	
B. Overall depth	varies depending upon cubic capacity	
C. Overall width (96” standard)	78"	102"
Capacities	1 cu. yd.	3.25 cu. yd.
weight (approximate)	1520 lbs	2761 lbs

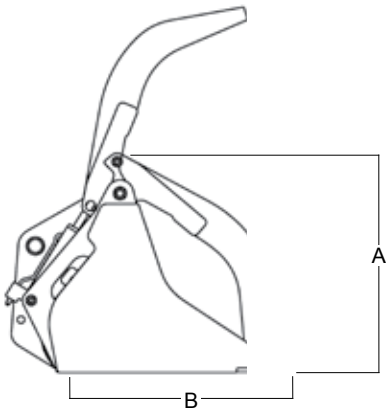

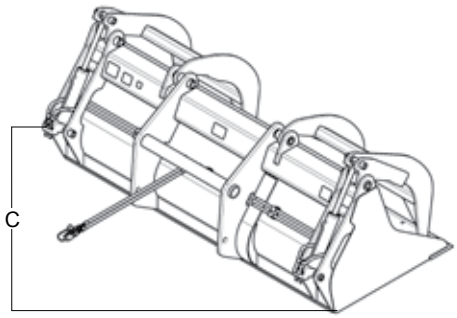

PH: (800) 456-7100

www.paladinlcg.com

PALADIN LIGHT CONSTRUCTION GROUP
BRADCO
FFC
HARLEY
McMILLEN
SWEEPSTER
The Power of Combined Excellence