OPERATOR'S & PARTS MANUAL

48" & 50" FORK POSITIONERS

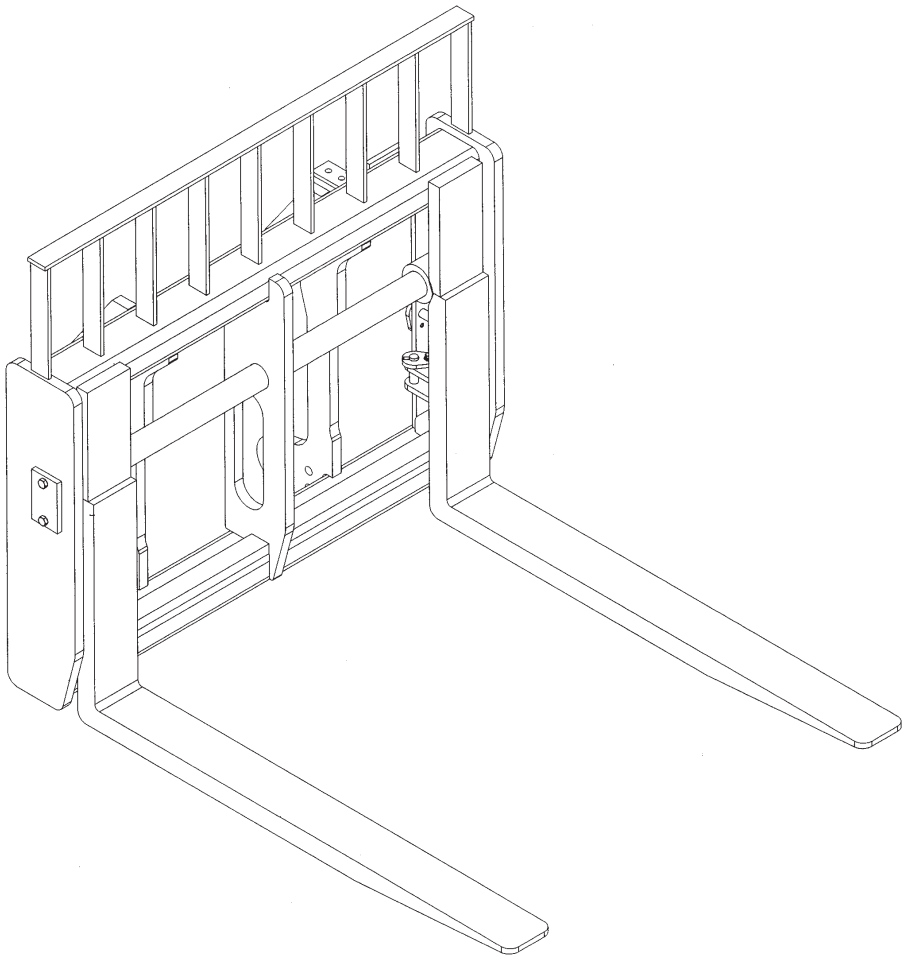

SERIAL NUMBER: _____

MODEL NUMBER: _____

Manual Number: 76831
Part Number: 76831
Date: August 15, 2007

800-922-2981 I www.paladinbrands.com P.O. Box 266, Delhi, IA 52223-0266, United States of America

M-1458 8-15-07

TABLE OF CONTENTS

PREFACE **1**
SAFETY PRECAUTIONS **3-7**
SAFETY STATEMENTS 4
GENERAL SAFETY PRECAUTIONS 4-6
EQUIPMENT SAFETY PRECAUTIONS 7
INSTALLATION AND OPERATION **8**
ATTACHING AND DETACHING EQUIPMENT 8
OPERATING EQUIPMENT 8
SIDE SHIFT FORK POSITIONER (#11329 & #12830) 8
MAINTENANCE AND SERVICE **9-11**
GENERAL INFORMATION 9
DAILY 9
EVERY 40 HOURS 9
CYLINDER SEAL REPLACEMENT 10-11
STORAGE **12**
LIMITED WARRANTY **13**
PARTS
FORK POSITIONERS
48” FORK POSITIONER ASSEMBLY #12365 (2”X4”X42” EXTRA DROP FORKS) 16-17
48” FORK POSITIONER ASSEMBLY #12436 (2”X4”X42” FORKS) 18-19
48” FORK POSITIONER ASSEMBLY #12321 (2”X4”X48” EXTRA DROP FORKS) 20-21
48” FORK POSITIONER ASSEMBLY #12568 (2”X4”X48” FORKS) 22-23
48” FORK POSITIONER ASSEMBLY #12833 (2”X4”X48” FORKS) 24-25
48” FORK POSITIONER ASSEMBLY #12679 (2”X4”X60” FORKS) 26-27
48” FORK POSITIONER ASSEMBLY #12872 (2”X4”X60” FORKS) 28-29
48” FORK POSITIONER ASSEMBLY #11311 (2”X5”X48” FORKS) 30-31
48” FORK POSITIONER ASSEMBLY #12407 (2”X5”X48” FORKS) 32-33
48” FORK POSITIONER ASSEMBLY #12474 (2”X5”X48” FORKS) 34-35
48” FORK POSITIONER ASSEMBLY #12669 (2”X5”X48” FORKS) 36-37
48” FORK POSITIONER ASSEMBLY #12831 (2”X5”X48” FORKS) 38-39
48” FORK POSITIONER ASSEMBLY #12931 (2”X5”X48” FORKS) 40-41
48” FORK POSITIONER ASSEMBLY #12952 (2”X5”X48” FORKS) 42-43
48” FORK POSITIONER ASSEMBLY #12444 (2”X5”X60” FORKS) 44-45
48” FORK POSITIONER ASSEMBLY #12960 (2”X5”X60” FORKS) 46-47
48” FORK POSITIONER ASSEMBLY #12634 (2”X5”X72” FORKS) 48-49
48” SIDE SHIFT FORK POSITIONER ASSEMBLY #11329 (2”X5”X48” FORKS) 50-51
48” SIDE SHIFT FORK POSITIONER ASSEMBLY #12830 (2”X5”X60” FORKS) 52-53
50” FORK POSITIONER ASSEMBLY #13007 (2”X4”X42” FORKS) 54-55
50” FORK POSITIONER ASSEMBLY #13046 (2”X4”X48” FORKS) 56-57
CYLINDERS
CYLINDER ASSEMBLY #88928 58-59
CYLINDER ASSEMBLY #100053 60-61
CYLINDER ASSEMBLY #109546 62-63

M-1459 6-20-07

FOREWORD

Although The Major has various fork positioners available, we are continually designing new sizes and mountings. If your combination is not listed, please contact the factory. We have extensive mounting information available to generate the product you need.

Below is a listing of the fork positioners that are currently available. See the “Parts” section of this manual for the assemblies “Shown”.

DESCRIPTION & MOUNT		***ASSEMBLY #***
CATERPILLAR		
48” Fork Positioner with 2” x 4” x 42” Extra Drop Forks - CAT IT/TH	(Shown)	12365
48” Fork Positioner with 2” x 4” x 42” Forks - CAT IT Only	(Shown)	12436
48” Fork Positioner with Fabco 2” x 4” x 48” Forks - CAT IT/TH	(Shown)	12321
48” Fork Positioner with 2” x 4” x 48” Forks - CAT 902-906	(Shown)	12833
48” Fork Positioner with 2” x 5” x 48” Forks - CAT TH Only	(Shown)	11311
48” Side Shift Fork Positioner with 2” x 5” x 48” Forks - CAT IT/TH	(Shown)	11329
48” Side Shift Fork Positioner with 2” x 5” x 48” Forks - CAT IT/TH	(Shown)	12830
48” Fork Positioner with 2” x 5” x 60” Forks - CAT IT Only	(Shown)	12444
48” Fork Positioner with 2” x 5” x 72” Forks - CAT IT Only	(Shown)	12634
50” Fork Positioner with 2” x 4” x 48” Forks - CAT 210 With Universal Hitch	(Shown)	13046
GEHL		
48” Fork Positioner with 2” x 5” x 60” Forks- GEHL DYNATTACH DL	(Shown)	12960
JCB		
48” Fork Positioner with 2” x 4” x 60” Forks- JCB Q-Fit	(Shown)	12679
48” Fork Positioner with 2” x 4” x 60” Forks- JCB 527-55	(Shown)	12872
48” Fork Positioner with 2” x 5” x 48” Forks- Q-Fit	(Shown)	12407
48” Fork Positioner with 2” x 5” x 48” Forks- JCB 212 BACKHOE	(Shown)	12474
48” Fork Positioner with 2” x 5” x 48” Forks- JCB 520/527-55	(Shown)	12931
JRB		
48” Fork Positioner with 2” x 5” x 60” Forks- JRB HV100 COUPLER	(Shown)	12669
MANITOU		
48” Fork Positioner with 2” x 4” x 48” Forks - MANITOU	(Shown)	12568
PETTIBONE		
48” Fork Positioner with 2” x 5” x 48” Forks - PETTIBONE 5528	(Shown)	12831
50” Fork Positioner with 2” x 4” x 42” Forks - PETTIBONE 8044	(Shown)	13007
TEREX		
48” Fork Positioner with 2” x 5” x 48” Forks - SS842 PIN-ON	(Shown)	12952

PREFACE

GENERAL COMMENTS

Congratulations on the purchase of your new attachment! This product was carefully designed and manufactured to give you many years of dependable service. Only minor maintenance, such as cleaning and lubricating, is required to keep it in top working condition. Be sure to observe all maintenance procedures and safety precautions in this manual and on any safety decals located on the product, and on any equipment on which the attachment is mounted. Also, check load charts before operating the attachment.

This manual has been designed to help you do a better, safer job. Read this manual carefully and become familiar with its contents.

WARNING! Never let anyone operate this unit without reading the "Safety Precautions" and "Operating Instructions" sections of this manual.

Always choose hard, level ground to park the vehicle on, and set the brake so the unit cannot roll.

Unless noted otherwise, right and left sides are determined from the operator's control position when facing the attachment.

NOTE: The illustrations and data used in this manual were current, according to the information available to us at the time of printing. However, we reserve the right to redesign and change the attachment as may be necessary, without notification.

BEFORE OPERATION

The primary responsibility for safety with this equipment falls to the operator. Make sure the equipment is operated only by trained individuals who have read and understand this manual. If there is any portion of this manual or function that you do not understand, contact your local authorized dealer or the manufacturer.

SAFETY ALERT SYMBOL

This is the "Safety Alert Symbol" used by this industry. This symbol is used to warn of possible injury. Be sure to read all warnings carefully. They are included for your safety and for the safety of others working with you.

SERVICE

When servicing your product, remember to use only manufacturer replacement parts. Substitute parts may not meet the standards required for safe, dependable operation.

To facilitate parts ordering, record the model and serial number of your unit in the space provided on the cover of this manual. This information may be obtained from the identification plate located on the product.

The parts department needs this information to ensure that you receive the correct parts for your specific model.

M-934 9-21-05-2

SAFETY STATEMENTS

THIS SYMBOL BY ITSELF OR WITH A WARNING WORD THROUGHOUT THIS MANUAL IS USED TO CALL YOUR ATTENTION TO INSTRUCTIONS INVOLVING YOUR PERSONAL SAFETY OR THE SAFETY OF OTHERS. FAILURE TO FOLLOW THESE INSTRUCTIONS CAN RESULT IN INJURY OR DEATH.

DANGER — **THIS SIGNAL WORD IS USED WHERE SERIOUS INJURY OR DEATH WILL RESULT IF THE INSTRUCTIONS ARE NOT FOLLOWED PROPERLY.**

WARNING — **THIS SIGNAL WORD IS USED WHERE SERIOUS INJURY OR DEATH COULD RESULT IF THE INSTRUCTIONS ARE NOT FOLLOWED PROPERLY.**

CAUTION — **THIS SIGNAL WORD IS USED WHERE MINOR INJURY COULD RESULT IF THE INSTRUCTIONS ARE NOT FOLLOWED PROPERLY.**

NOTICE — **NOTICE INDICATES A PROPERTY DAMAGE MESSAGE.**

GENERAL SAFETY PRECAUTIONS

WARNING!

READ MANUAL PRIOR TO INSTALLATION

Improper installation, operation, or maintenance of this equipment could result in serious injury or death. Operators and maintenance personnel should read this manual, as well as all manuals related to this equipment and the prime mover thoroughly before beginning installation, operation, or maintenance. **FOLLOW ALL SAFETY INSTRUCTIONS IN THIS MANUAL AND THE PRIME MOVER'S MANUAL(S).**

READ AND UNDERSTAND ALL SAFETY STATEMENTS

Read all safety decals and safety statements in all manuals prior to operating or working on this equipment. Know and obey all OSHA regulations, local laws, and other professional guidelines for your operation. Know and follow good work practices when assembling, maintaining, repairing, mounting, removing, or operating this equipment.

KNOW YOUR EQUIPMENT

Know your equipment's capabilities, dimensions, and operations before operating. Visually inspect your equipment before you start, and never operate equipment that is not in proper working order with all safety devices intact. Check all hardware to ensure it is tight. Make certain that all locking pins, latches, and connection devices are properly installed and secured. Remove and replace any damaged, fatigued, or excessively worn parts. Make certain all safety decals are in place and are legible. Keep decals clean, and replace them if they become worn or hard to read.

M-806 7-28-05-2

GENERAL SAFETY PRECAUTIONS

WARNING!

PROTECT AGAINST FLYING DEBRIS

Always wear proper safety glasses, goggles, or a face shield when driving pins in or out, or when any operation causes dust, flying debris, or any other hazardous material.

WARNING!

LOWER OR SUPPORT RAISED EQUIPMENT

Do not work under raised booms without supporting them. Do not use support material made of concrete blocks, logs, buckets, barrels, or any other material that could suddenly collapse or shift positions. Make sure support material is solid, not decayed, warped, twisted, or tapered. Lower booms to ground level or on blocks. Lower booms and attachments to the ground before leaving the cab or operator's station.

WARNING!

USE CARE WITH HYDRAULIC FLUID PRESSURE

Hydraulic fluid under pressure can penetrate the skin and cause serious injury or death. Hydraulic leaks under pressure may not be visible. Before connecting or disconnecting hydraulic hoses, read your prime mover's operator's manual for detailed instructions on connecting and disconnecting hydraulic hoses or fittings.

- Keep unprotected body parts, such as face, eyes, and arms as far away as possible from a suspected leak. Flesh injected with hydraulic fluid may develop gangrene or other permanent disabilities.
- If injured by injected fluid, see a doctor at once. If your doctor is not familiar with this type of injury, ask him to research it immediately to determine proper treatment.
- Wear safety glasses, protective clothing, and use a piece of cardboard or wood when searching for hydraulic leaks. **DO NOT USE YOUR HANDS! SEE ILLUSTRATION.**

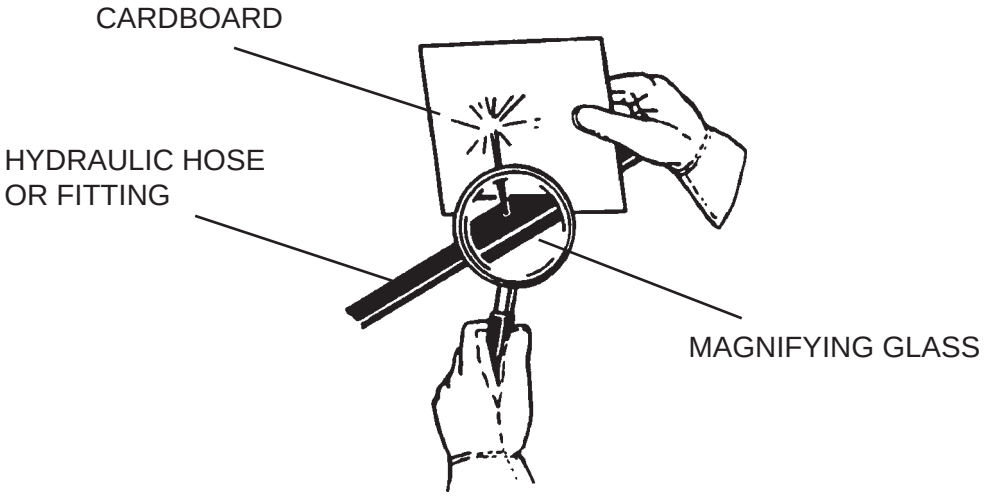

M-807 7-28-05-2

GENERAL SAFETY PRECAUTIONS

WARNING!

DO NOT MODIFY MACHINE OR ATTACHMENTS

Modifications may weaken the integrity of the attachment and may impair the function, safety, life, and performance of the attachment. When making repairs, use only the manufacturer's genuine parts, following authorized instructions. Other parts may be substandard in fit and quality. Never modify any ROPS (Roll Over Protection Structure) or FOPS (Falling Object Protective Structure) equipment or device. Any modifications must be authorized in writing by the manufacturer.

WARNING!

SAFELY MAINTAIN AND REPAIR EQUIPMENT

- Do not wear loose clothing or any accessories that can catch in moving parts. If you have long hair, cover or secure it so that it does not become entangled in the equipment.
- Work on a level surface in a well-lit area.
- Use properly grounded electrical outlets and tools.
- Use the correct tools for the job at hand. Make sure they are in good condition for the task required.
- Wear the protective equipment specified by the tool manufacturer.

SAFELY OPERATE EQUIPMENT

Do not operate equipment until you are completely trained by a qualified operator in how to use the controls, know its capabilities, dimensions, and all safety requirements. See your machine's manual for these instructions.

- Keep all step plates, grab bars, pedals, and controls free of dirt, grease, debris, and oil.
- Never allow anyone to be around the equipment when it is operating.
- Do not allow riders on the attachment or the prime mover.
- Do not operate the equipment from anywhere other than the correct operator's position.
- Never leave equipment unattended with the engine running, or with this attachment in a raised position.
- Do not alter or remove any safety feature from the prime mover or this attachment.
- Know your work site safety rules as well as traffic rules and flow. When in doubt on any safety issue, contact your supervisor or safety coordinator for an explanation.

M-808 7-28-05-2

EQUIPMENT SAFETY PRECAUTIONS

WARNING!

KNOW WHERE UTILITIES ARE

Observe overhead electrical and other utility lines. Be sure equipment will clear them. When digging, call your local utilities for location of buried utility lines, gas, water, and sewer, as well as any other hazard you may encounter.

OPERATING THE PRIME MOVER

Avoid steep hillside operation, which could cause the prime mover to overturn. Consult your machine operator's and safety manuals for maximum incline allowable.

When operating on a slope, keep the load low, and proceed with extreme caution.
Do not drive ACROSS a steep slope - drive straight up and down.
With LOADED forks - drive with the forks and load facing uphill.
With EMPTY forks - drive with the forks facing downhill.

OPERATING THE FORK POSITIONER

- Never use the attachment for a work platform or personnel carrier.
- Never work under a raised attachment.
- Specified lift capacities must not be exceeded, otherwise machine stability will not be sufficient. Always observe lift capacity limits listed in machine specifications or on load charts furnished with the prime mover.
- An operator must not use drugs or alcohol, which can change his or her alertness or coordination. An operator taking prescription or over-the-counter drugs should seek medical advice on whether or not he or she can safely operate equipment.
- Always check locking pins before operating any attachment.
- Never lift, move, or swing loaded forks over anyone.
- Always space the forks correctly for the load. Loads can fall off incorrectly spaced forks. Make sure the forks are completely under the load before lifting.
- Never stack loads on uneven ground. Loads stacked on uneven ground can topple.
- Never lift a load with one fork. A load lifted with one fork can slip off and cause injury.
- Secure loads properly. Unsecured loads can fall unexpectedly.
- Do not handle round bales with fork lift tines.
- Don't obstruct your vision when traveling or working. Carry the forks low for maximum stability and visibility.

TRANSPORTING THE FORK POSITIONER

- Travel only with the attachment in a safe transport position to prevent uncontrolled movement. Drive slowly over rough ground, and on slopes.
- When driving on public roads use safety lights, reflectors, Slow Moving Vehicle signs etc., to prevent accidents. Check local government regulations that may affect you.
- Do not drive close to ditches, excavations, etc.; a cave-in could result.
- Do not smoke when refueling the prime mover. Allow room in the gas tank for expansion. Wipe up any spilled fuel, and secure cap tightly, when done.

MAINTAINING THE FORK POSITIONER

- Never perform any work on the equipment unless you are authorized and qualified to do so. Always read the operator's and service manual(s) before any repair is made. After completing maintenance or repair, check for correct functioning of the attachment. If not functioning properly, always attach a "DO NOT OPERATE" tag to the machine until all problems are corrected.
- Worn, damaged, or illegible safety decals must be replaced. New safety decals can be ordered from the manufacturer.

M-1530 6-20-07

INSTALLATION AND OPERATION

ATTACHING AND DETACHING EQUIPMENT

Please see your vehicle operator's manual for instructions on attaching and detaching your equipment.

WARNING! To prevent serious personal injury or death, only attach equipment that is designed for your prime mover. Make sure the fork positioner is securely latched to the attachment mechanism of your unit. Failure to do so could result in separation of the fork positioner from the unit.

Specified lift capacities must not be exceeded, otherwise machine stability will not be sufficient. Always observe lift capacity limits listed in machine specifications.

OPERATING EQUIPMENT

Read all Safety Precautions before operating your new attachment.

1. Approach the load in such a fashion that the weight will be centered between the fork tines. The heaviest side should be closest to the fork frame and not near the tips of the fork tines.
2. Before lifting, make certain the fork tines are completely under the load and level.
3. Lift the load slightly to make sure the load is stable. If the load appears unstable, lower and reposition the tines to achieve full stability.
4. Raise the loader to the MINIMUM height required for the terrain.
5. During material handling: keep the fork tines level, stop and start the loader gradually, and slow down before turning and avoid obstacles, bumps, or holes.
6. Check the load frequently to ensure stability.
7. For personal safety, lower the attachment to the ground, set the parking brake, shut off engine, and remove key before getting off of your prime mover.

IMPORTANT: If your hydraulically operated attachment starts to drift due to oil leakage within the cylinder assembly, discontinue use until the problem has been corrected.

SIDE SHIFT FORK POSITIONER

When using the shift feature to pick up a load, be sure to return the forks and load to the center position as soon as possible. Do NOT travel with loaded forks shifted to the side.

MAINTENANCE & SERVICE

GENERAL INFORMATION

Regular maintenance is the key to long equipment life and safe operation. Maintenance requirements have been kept to an absolute minimum. However, it is very important that these maintenance functions be performed as described in this section.

DAILY

- Check all bolts and nuts for tightness.
- Replace any missing bolts or nuts with approved replacement parts.
- Check hydraulic system for hydraulic oil leaks. See procedure below.
- Visually inspect the machine for worn parts or cracked welds, and repair as necessary.

WARNING! Escaping fluid under pressure can have sufficient force to penetrate the skin, causing serious personal injury. Fluid escaping from a very small hole can be almost invisible. Use a piece of cardboard or wood, rather than hands to search for suspected leaks.

Keep unprotected body parts, such as face, eyes, and arms as far away as possible from a suspected leak. Flesh injected with hydraulic fluid may develop gangrene or other permanent disabilities.

If injured by injected fluid, see a doctor at once. If your doctor is not familiar with this type of injury, ask him or her to research it immediately to determine proper treatment.

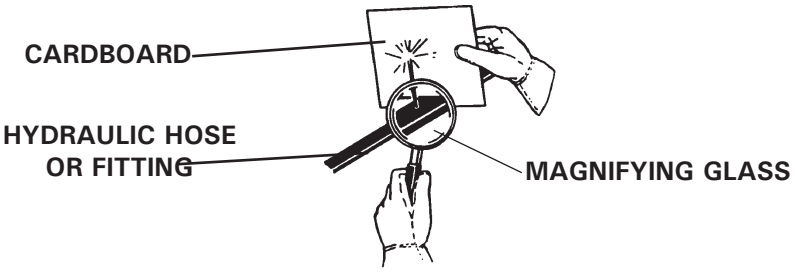

IMPORTANT: When replacing parts, use only factory approved replacement parts. Manufacturer will not claim responsibility for use of unapproved parts or accessories and/or other damages as a result of their use.

EVERY 40 HOURS

Lubrication is an important part of maintenance. It is recommended that all grease fittings be lubricated after the intitial 8 hours of operation, and then after every 40 hours of use.

M-852 5-27-05

MAINTENANCE AND SERVICE

CYLINDER SEAL REPLACEMENT

The following information is provided to assist you in the event you should need to repair or rebuild a hydraulic cylinder. When working on hydraulic cylinders, make sure that the work area and tools are clean and free of dirt to prevent contamination of the hydraulic system and damage to the hydraulic cylinders. Always protect the active part of the cylinder rod (the chrome section). Nicks or scratches on the surface of the rod could result in cylinder failure. Clean all parts thoroughly with a cleaning solvent before reassembly.

DISASSEMBLY PROCEDURE

IMPORTANT: Do not contact the active surface of the cylinder rod with the vise. Damage to the rod could result.

THREADED TYPE GLAND

1. Rotate the gland with a spanner wrench counterclockwise until the gland is free of the cylinder tube.
2. Pull the cylinder rod from the cylinder tube and inspect the piston and the bore of the cylinder tube for deep scratches or galling. If damaged, the piston AND the cylinder tube must be replaced.

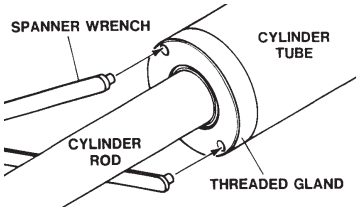

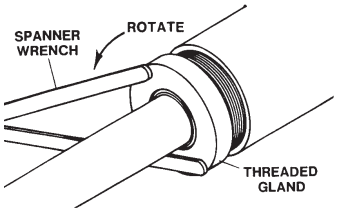

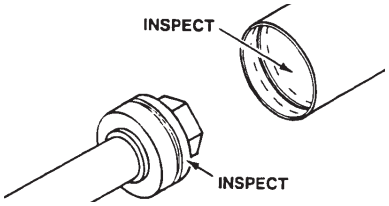

3. Remove the hex nut, piston, flat washer or spacer tube (if so equipped), and gland from the cylinder rod. If the cylinder rod is rusty, scratched, or bent, it must be replaced.
4. Remove and discard all the old seals.

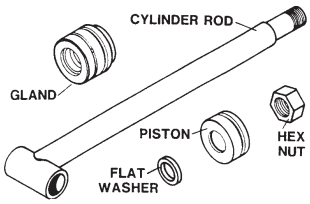

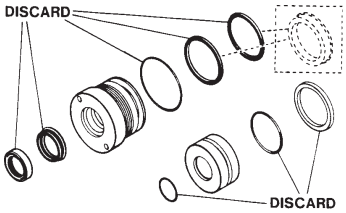

ASSEMBLY PROCEDURE

IMPORTANT: Replace all seals even if they do not appear to be damaged. Failure to replace all seals may result in premature cylinder failure. NOTE: Seal kits will service most cylinders of similar bore size and rod diameter.

1. Install the cylinder rod seal in the gland first. Be careful not to damage the seal in the process, as it is somewhat difficult to install.

NOTE: A special installation tool (Part #65349) is available to help with installing the seal. Simply fit the end of the tool over the seal so that the large prong of the tool is on the outside of the seal, and the two smaller prongs on the inside. The lip of the seal should be facing towards the tool. Rotate the handles on the tool around to wrap the seal around the end of the tool.

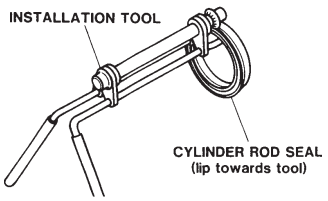

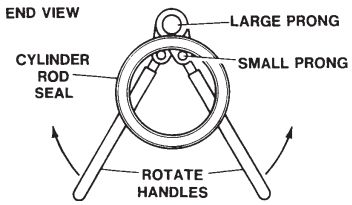

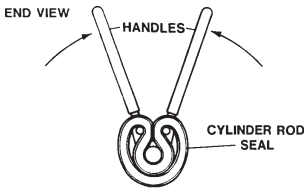

10356 10-13-05

Now insert the seal into the gland from the inner end. Position the seal in its groove, and release and remove the tool. Press the seal into its seat the rest of the way by hand.

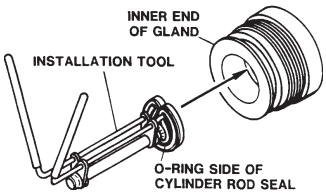

2. Install the new piston ring, rod wiper, O-rings and backup washers, if applicable, on the piston.

   Be careful not to damage the seals. Caution must be used when installing the piston ring. The ring must be stretched carefully over the piston with a smooth, round, pointed tool.

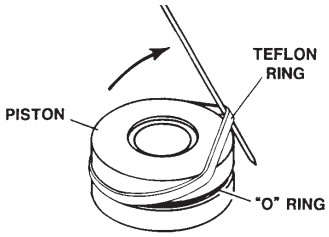

3. After installing the rod seal inside the gland, as shown in step #1, install the external seal.

NOTE: Threaded glands may have been equipped with a separate O-ring and backup washer system or a polypak (all in one) type seal. Current seal kits contain a polypak (all in one) type seal to replace the discarded seal types on ALL THREADED GLANDS.

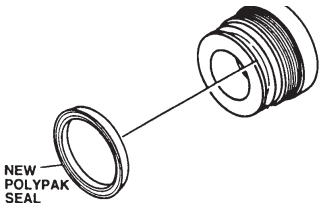

4. Slide the gland onto the cylinder rod, being careful not to damage the rod wiper. Then install the spacer, or flat washer (if so equipped), small o-ring, piston, and hex nut onto the end of the cylinder rod.

5. Secure the cylinder rod (mounting end) in a vise with a support at its center. Torque the nut to the amount shown for the thread diameter of the cylinder rod (see chart).

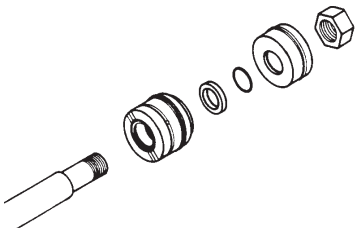

Thread Diameter	POUNDS - FEET
7/8"	150-200
*1"	230-325
1-1/8"	350-480
1-1/4"	490-670
1-3/8"	670-900
*** 1" Thread Diameter WITH 1.25" Rod Diameter**	
Min. 230 ft. lbs.	**Max. 250 ft. lbs.**

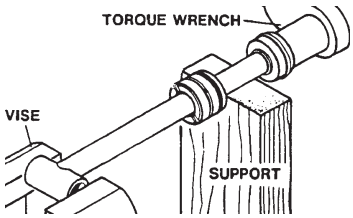

IMPORTANT: Do not contact the active surface of the cylinder rod with the vise. Damage to the rod could result.

6. Apply a lubricant (such as Lubriplate #105) to the piston and teflon ring. Insert the cylinder rod assembly into the cylinder tube.

IMPORTANT: Ensure that the piston ring fits squarely into the cylinder tube and piston groove, otherwise the ring may be damaged and a leak will occur.

7. Use a spanner wrench to rotate the gland clockwise into the cylinder. Continue to rotate the gland with the spanner wrench until it is tight.

WARNING! **Cylinders serviced in the field are to be tested for leakage prior to the attachment being placed in work. Failure to test rebuilt cylinders could result in damage to the cylinder and/or the attachment, cause severe personal injury or even death.**

10357 10-13-05

STORAGE

GENERAL INFORMATION

The following storage procedure will help you to keep your attachment in top condition. It will also help you get off to a good start the next time your equipment is needed. We therefore strongly recommend that you take the extra time to follow these procedures whenever your attachment will not be used for an extended period of time.

PREPARATION FOR STORAGE

1. Clean the attachment thoroughly, removing all mud, dirt, and grease.
2. Inspect for visible signs of wear, breakage, or damage. Order any parts required, and make the necessary repairs, to avoid delays when starting next season.
3. Tighten all loose nuts, capscrews, and hydraulic connections.
4. Lubricate all grease fittings.
5. Coat the exposed portions of the cylinder rods with grease.
6. Connect the hydraulic couplers together to protect the hydraulic system from contaminates.
7. Touch up all unpainted and exposed areas with paint, to prevent rust.
8. Replace decals, if damaged or in unreadable condition.
9. Store the attachment in a dry and protected place, with a cover, if possible. Leaving the attachment outside will materially shorten its life.

REMOVING FROM STORAGE

1. Remove all protective coverings.
2. Check hydraulic hoses for deterioration, and replace if necessary.

LIMITED WARRANTY

All new Major products are warranted to be free from defects in materials or workmanship which may cause failure under normal usage and service, when used for the purpose intended.

In the event of failure within twelve (12) months from initial retail sale, lease or rental date (excluding cable, ground engaging parts such as sprockets, digging chain, bearings, teeth, tamping and demolition heads, blade cutting edges, pilot bits, auger teeth, auger heads & broom bristles), if after examination, The Major determines failure was due to defective material and/or workmanship, parts will be repaired or replaced. The Major may request defective part or parts be returned prepaid to them for inspection at their place of business at Delhi, Iowa, or to a location specified by The Major.

Any claims under this warranty must be made within fifteen (15) days after the Buyer learns of the facts upon which such claim is based. All claims not made in writing and received by The Major within the time period specified above shall be deemed waived.

THIS WARRANTY IS IN LIEU OF ALL OTHER WARRANTIES EXPRESSED OR IMPLIED, AND THERE ARE NO WARRANTIES OF MERCHANTABILITY OR OF FITNESS FOR A PARTICULAR PURPOSE. IN NO EVENT SHALL THE MAJOR BE LIABLE FOR CONSEQUENTIAL OR SPECIAL DAMAGE.

THE MAJOR'S LIABILITY FOR ANY AND ALL LOSSES AND DAMAGES TO BUYER, RESULTING FROM ANY CAUSE WHATSOEVER, INCLUDING THE MAJOR'S NEGLIGENCE, IRRESPECTIVE OF WHETHER SUCH DEFECTS ARE DISCOVERABLE OR LATENT, SHALL IN NO EVENT EXCEED THE PURCHASE PRICE OF THE PARTICULAR PRODUCTS WITH RESPECT TO WHICH LOSSES OR DAMAGES ARE CLAIMED, OR, AT THE ELECTION OF THE MAJOR, THE REPAIR OR REPLACEMENT OF DEFECTIVE OR DAMAGED PRODUCTS.

M-711 11-9-05-4

PARTS

The following section contains detailed diagrams and parts lists which include your attachment. Please use these diagrams and parts lists to locate replacement parts, prior to contacting the parts department.

When servicing your attachment, remember to use only original manufacturer replacement parts. Substitute parts may not meet the standards required for safe, dependable operation.

To facilitate parts ordering, have the model and serial number of your product ready, to ensure that you receive the correct parts for your specific attachment.

The model and serial number for your attachment should be recorded in the space provided on the cover of this manual. This information may be obtained from the serial number identification plate located on your attachment. **See the parts diagram for your attachment for the location.**

NOTE: Most daily and emergency orders received by 2:00 P.M. will be shipped the same day received, with "Emergency-Machine-Down" orders receiving first priority.

THE MAJOR
PALADIN LIGHT CONSTRUCTION

PARTS DEPARTMENT
(563) 922-2981
(800) 922-2981

We Encourage Fax Orders
(563) 922-2593

M-1127 10-4-06-2

FORK POSITIONER

48” WIDE (2" x 4" x 42” EXTRA DROP FORKS) - ASSEMBLY #12365

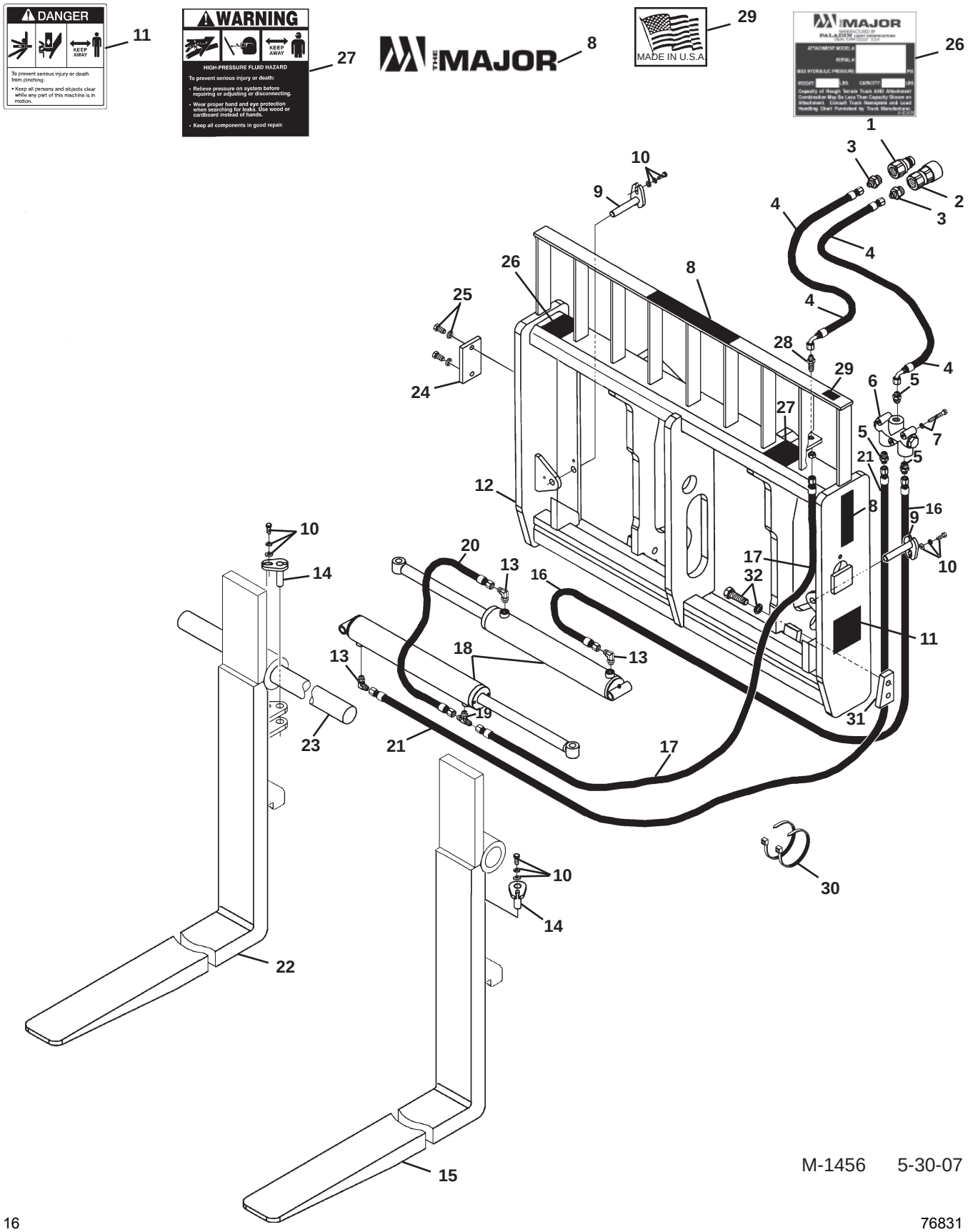

M-1456 5-30-07

FORK POSITIONER

48” WIDE (2" x 4" x 42” EXTRA DROP FORKS) - ASSEMBLY #12365

ITEM	QTY.	PART NO.	DESCRIPTION
1	1	22519	Male Quick Coupler
2	1	22518	Female Quick Coupler
3	2	30201	Straight Connector, 12MBo-6MJ
4	2	37893	Hose .38” X 40” 6FJX-6FJX90°
5	3	3125	Straight Connector, 6MJ-8MP
6	1	32360	Flow Divider Valve
7	3	1277	.31” UNF x 2.25” Hex Capscrew
	3	1502	.31” Lock Washer
8	2	40501	Major Logo, Small
	1	40502	Major Logo, Medium
9	2	14659	Pin, .75” x 4.13”
10	4	1293	.38” UNF x 1.00” Hex Capscrew
	4	1503	.38” Lock Washer
	4	1800	.38” Hard Flat Washer
11	2	40149	Pinch Point Danger Decal
12	1	14580	Fork Positioner Frame
13	3	3434	90° Elbow, 6MBo-6MJ
14	2	14554	Pin, .75” x 2.50”
15	1	15502	Left Fork Positioner Tine, 2” x 4” x 42”, Extra Drop
16	1	37803	Hose .25” X 17” 6FJX-6FJX90°
17	1	35694	Hose .25” X 34” 6FJX-6FJX
18	2	100053	Cylinder Assembly
19	1	30137	Tee, 6MJ-6MJ-6MBo
20	1	37421	Hose .25” X 25” 6FJX-6FJX
21	1	37575	Hose .25” X 53” 6FJX-6FJX
22	1	15501	Right Fork Positioner Tine, 2” x 4” x 42”, Extra Drop
23	1	33131	Fork Pin, 2.25” x 50.00”
24	1	14606	Pin Retainer
25	2	1339	.50” UNF x 1.25” Hex Capscrew
	2	1505	.50” Lock Washer
26	1	-----	Serial Number Identification Tag Location
27	1	40151	High Pressure Warning Decal
28	1	3297	Bulkhead Straight Connector, 6MJ-6MJ
29	1	4338	Made in USA Decal
30	2	1550	Hose Tie
31	2	14228	Stop Block
32	4	10012	.75” UNC x 2.25” Hex Capscrew, Grade 8

M-1457 5-30-07

FORK POSITIONER

48” WIDE (2" x 4" x 42” FORKS) - ASSEMBLY #12436

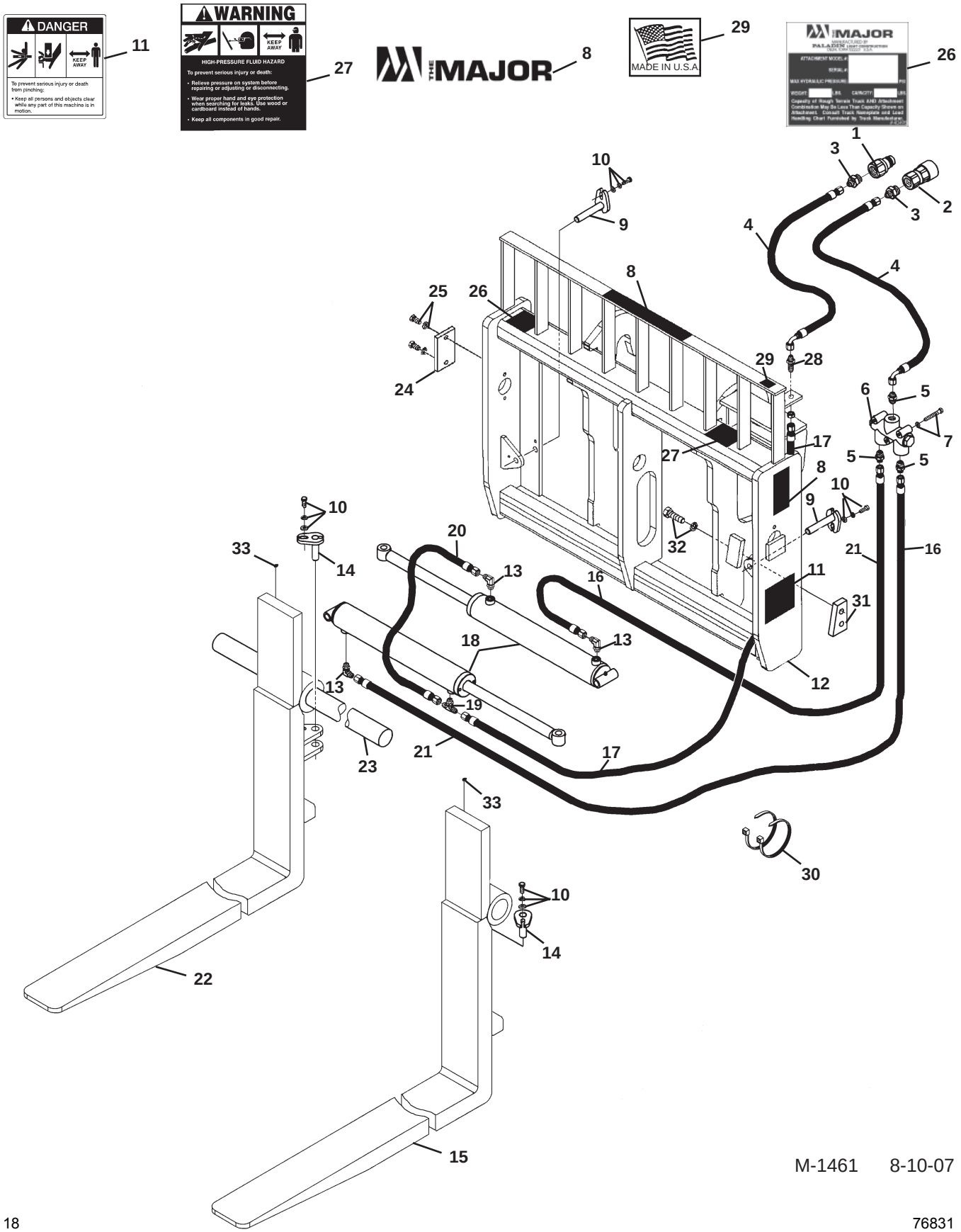

M-1461 8-10-07

FORK POSITIONER

48” WIDE (2" x 4" x 42” FORKS) - ASSEMBLY #12436

ITEM	QTY.	PART NO.	DESCRIPTION
1	1	22519	Male Quick Coupler
2	1	22518	Female Quick Coupler
3	2	30201	Straight Connector, 12MBo-6MJ
4	2	37897	Hose .38” X 52” 6FJX-6FJX90°
5	3	3125	Straight Connector, 6MJ-8MP
6	1	32360	Flow Divider Valve
7	3	1277	.31” UNF x 2.25” Hex Capscrew
	3	1502	.31” Lock Washer
8	2	40501	Major Logo, Small
	1	40502	Major Logo, Medium
9	2	14659	Pin, .75” x 4.13”
10	4	1293	.38” UNF x 1.00” Hex Capscrew
	4	1503	.38” Lock Washer
	4	1800	.38” Hard Flat Washer
11	2	40149	Pinch Point Danger Decal
12	1	16983	Fork Positioner Frame
13	3	3434	90° Elbow, 6MBo-6MJ
14	2	14554	Pin, .75” x 2.50”
15	1	16626	Left Fork Positioner Tine, 2” x 4” x 42”
16	1	37803	Hose .25” X 17” 6FJX-6FJX90°
17	1	35694	Hose .25” X 34” 6FJX-6FJX
18	2	100053	Cylinder Assembly
19	1	30137	Tee, 6MJ-6MJ-6MBo
20	1	37421	Hose .25” X 25” 6FJX-6FJX
21	1	37575	Hose .25” X 53” 6FJX-6FJX
22	1	16627	Right Fork Positioner Tine, 2” x 4” x 42”
23	1	33131	Fork Pin, 2.25” x 50.00”
24	1	14606	Pin Retainer
25	2	1339	.50” UNF x 1.25” Hex Capscrew
	2	1505	.50” Lock Washer
26	1	-----	Serial Number Identification Tag Location
27	1	40151	High Pressure Warning Decal
28	1	3297	Bulkhead Straight Connector, 6MJ-6MJ
29	1	4338	Made in USA Decal
30	2	1550	Hose Tie
31	2	14228	Stop Block
32	4	10012	.75” UNC x 2.25” Hex Capscrew, Grade 8
	4	1507	.75” Lock Washer
33	2	9371	Grease Zerk

M-1462 5-30-07

FORK POSITIONER

48” WIDE (2" x 4" x 48” EXTRA DROP FORKS) - ASSEMBLY #12321

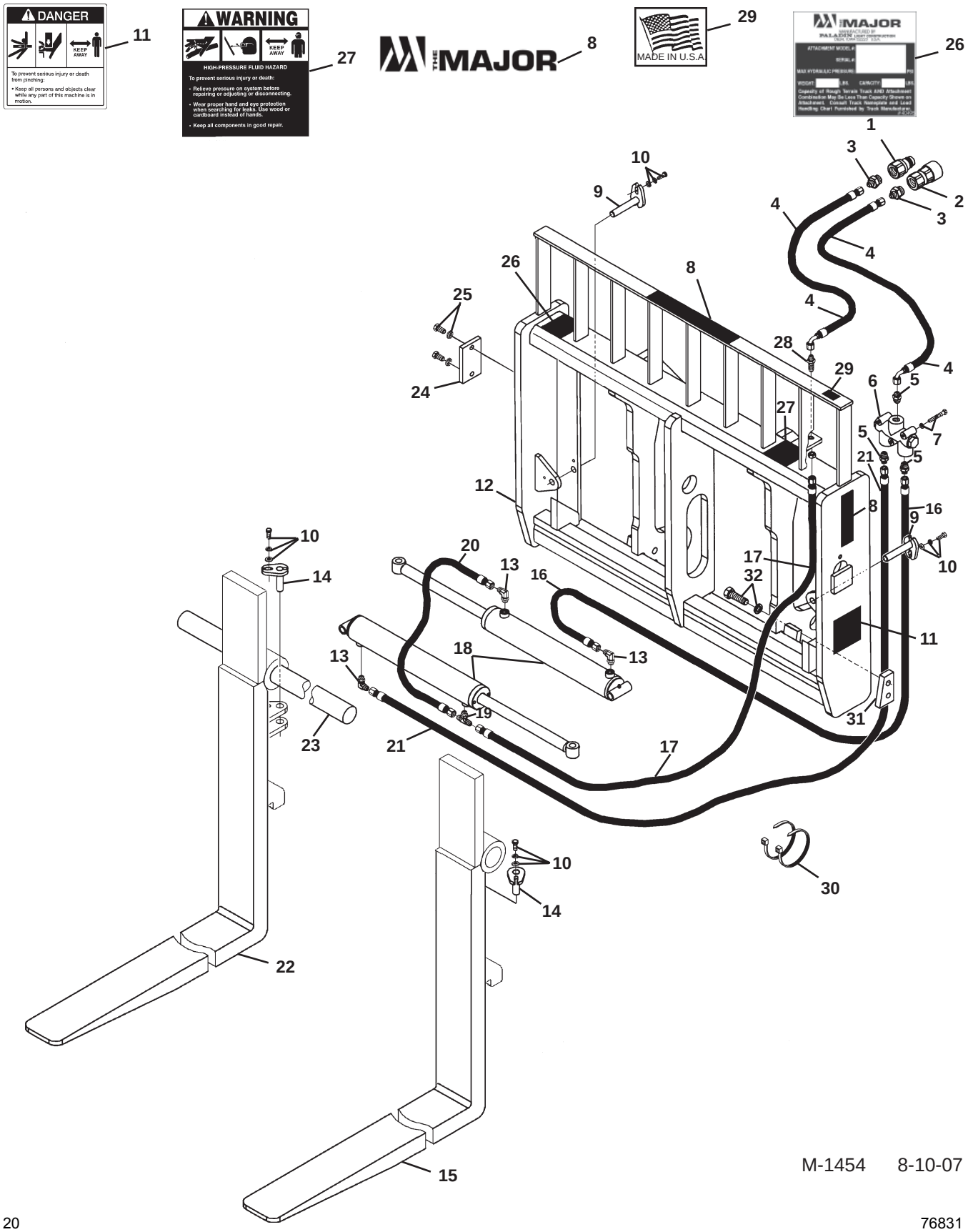

M-1454 8-10-07

FORK POSITIONER

48” WIDE (2" x 4" x 48” EXTRA DROP FORKS) - ASSEMBLY #12321

ITEM	QTY.	PART NO.	DESCRIPTION
1	1	22519	Male Quick Coupler
2	1	22518	Female Quick Coupler
3	2	30201	Straight Connector, 12MBo-6MJ
4	2	37893	Hose .38” X 40” 6FJX-6FJX90°
5	3	3125	Straight Connector, 6MJ-8MP
6	1	32360	Flow Divider Valve
7	3	1277	.31” UNF x 2.25” Hex Capscrew
	3	1502	.31” Lock Washer
8	2	40501	Major Logo, Small
	1	40502	Major Logo, Medium
9	2	14659	Pin, .75” x 4.13”
10	4	1293	.38” UNF x 1.00” Hex Capscrew
	4	1503	.38” Lock Washer
	4	1800	.38” Hard Flat Washer
11	2	40149	Pinch Point Danger Decal
12	1	14580	Fork Positioner Frame
13	3	3434	90° Elbow, 6MBo-6MJ
14	2	14554	Pin, .75” x 2.50”
15	1	33128	Left Fork Positioner Tine, 2” x 4” x 48”, Extra Drop
16	1	37803	Hose .25” X 17” 6FJX-6FJX90°
17	1	35694	Hose .25” X 34” 6FJX-6FJX
18	2	100053	Cylinder Assembly
19	1	30137	Tee, 6MJ-6MJ-6MBo
20	1	37421	Hose .25” X 25” 6FJX-6FJX
21	1	37575	Hose .25” X 53” 6FJX-6FJX
22	1	33127	Right Fork Positioner Tine, 2” x 4” x 48”, Extra Drop
23	1	33131	Fork Pin, 2.25” x 50.00”
24	1	14606	Pin Retainer
25	2	1339	.50” UNF x 1.25” Hex Capscrew
	2	1505	.50” Lock Washer
26	1	-----	Serial Number Identification Tag Location
27	1	40151	High Pressure Warning Decal
28	1	3297	Bulkhead Straight Connector, 6MJ-6MJ
29	1	4338	Made in USA Decal
30	2	1550	Hose Tie
31	2	14228	Stop Block
32	4	10012	.75” UNC x 2.25” Hex Capscrew, Grade 8
	4	1507	.75” Lock Washer

M-1455 5-30-07

FORK POSITIONER

48” WIDE (2” X 4” X 48” FORKS) - ASSEMBLY #12568

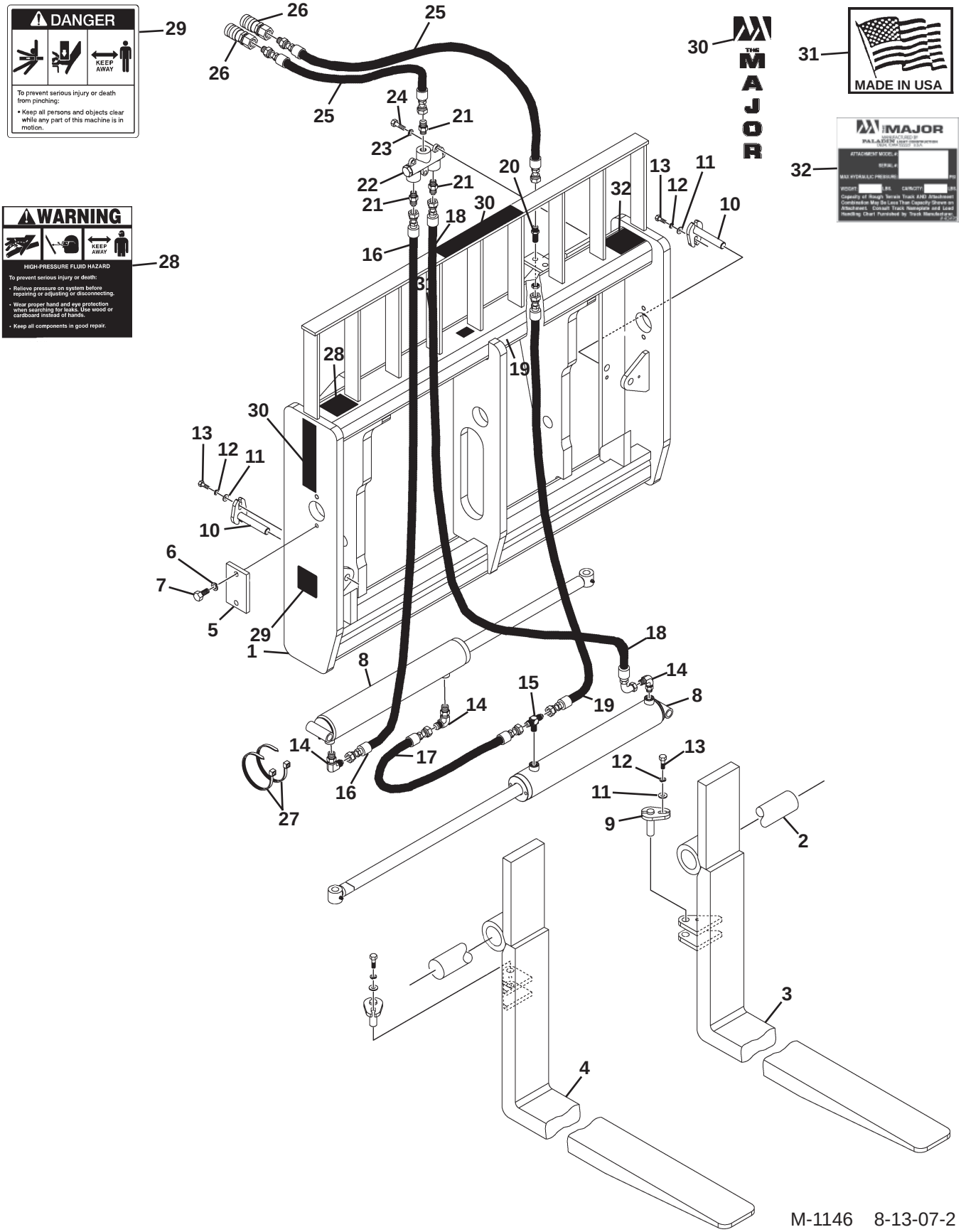

M-1146 8-13-07-2

FORK POSITIONER

48” WIDE (2” X 4” X 48” FORKS) - ASSEMBLY #12568

ITEM	QTY.	PART NO.	DESCRIPTION
1	1	100076	Fork Positioner Frame
2	1	33131	Fork Pin, 2.25” x 50.00”
3	1	17394	Left Fork Positioner Tine, 2” x 4” x 48”
4	1	17395	Right Fork Positioner Tine, 2” x 4” x 48”
5	1	14606	Pin Retainer
6	2	1505	.50” Lock Washer
7	2	1339	.50” UNF x 1.25” Hex Capscrew
8	2	100053	Cylinder Assembly
9	2	14554	Pin, .75” x 2.50”
10	2	14659	Pin, .75” x 4.13”
11	4	1800	.38” Hard Flat Washer
12	4	1503	.38” Lock Washer
13	4	1293	.38” UNF x 1.00” Hex Capscrew
14	3	3434	90° Elbow, 6MBo-6MJ
15	1	30137	Tee, 6MJ-6MJ-6MBo
16	1	37575	Hose .25” X 53” 6FJX-6FJX
17	1	35694	Hose .25” X 34” 6FJX-6FJX
18	1	37803	Hose .25” X 17” 6FJX-6FJX90°
19	1	37421	Hose .25” X 25” 6FJX-6FJX
20	1	3297	Bulkhead Straight Connector, 6MJ-6MJ
21	3	3125	Straight Connector, 6MJ-8MP
22	1	32360	Flow Divider Valve
23	3	1502	.31” Lock Washer
24	3	1277	.31” UNF x 2.25” Hex Capscrew
25	2	38033	Hose .38” X 87” 6FJX-8MBo
26	2	84928	Female Quick Coupler
27	2	1550	Hose Tie
28	1	40151	High Pressure Warning Decal
29	2	40149	Pinch Point Danger Decal
30	2	40501	Major Logo, Small
	1	40502	Major Logo, Medium
31	1	4338	Made in USA Decal
32	1	-----	Serial Number Identification Tag Location

M-1147 5-30-07-2

FORK POSITIONER

48” WIDE (2" x 4" x 48” FORKS) - ASSEMBLY #12833

11

26

THE MAJOR 8

28

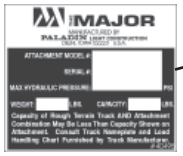

25

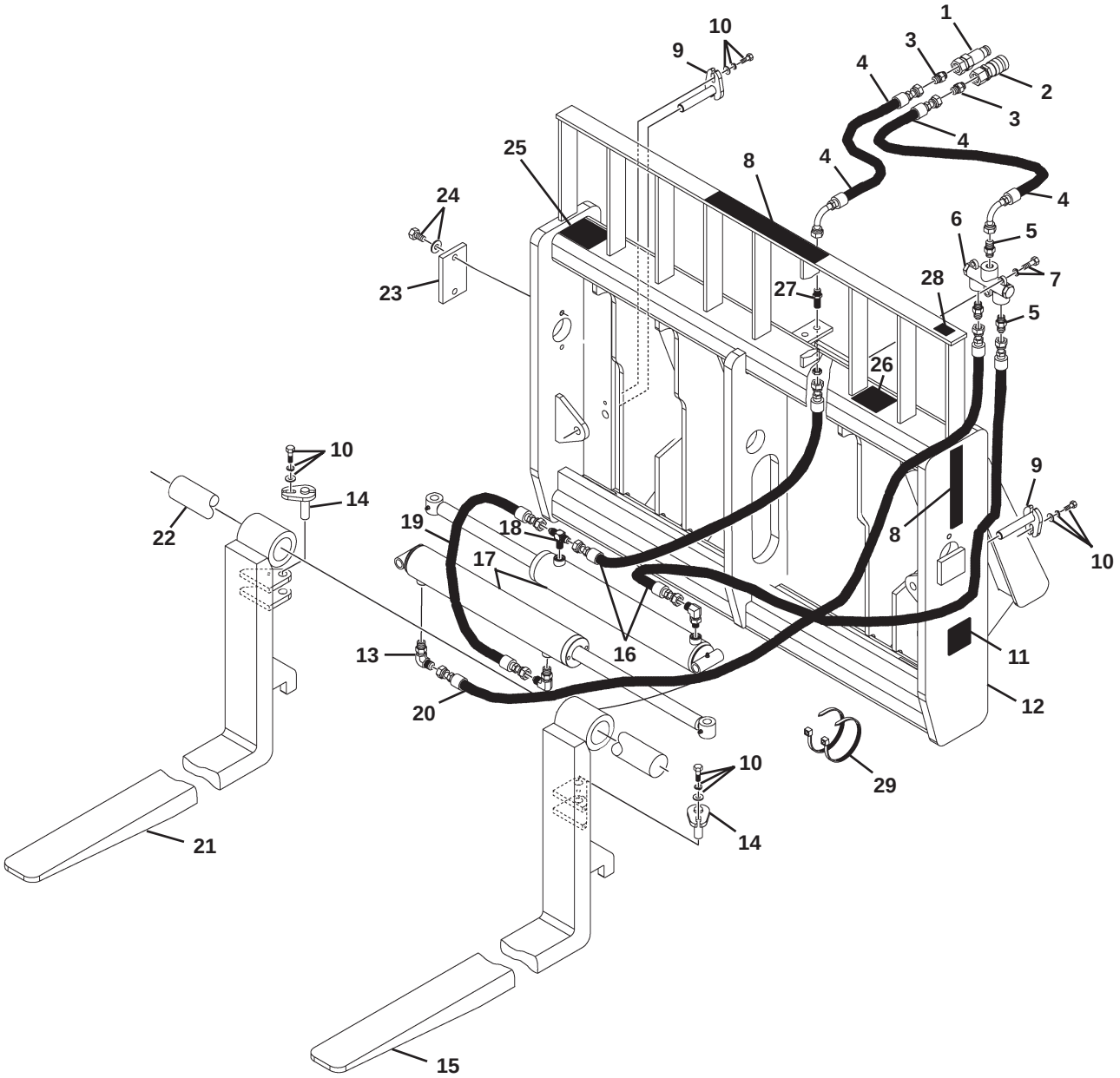

M-1010 11-18-05

FORK POSITIONER

48” WIDE (2” x 4” x 48” FORKS) - ASSEMBLY #12833

ITEM	QTY.	PART NO.	DESCRIPTION
1	1	22519	Male Quick Coupler
2	1	22518	Female Quick Coupler
3	2	30201	Straight Connector, 12MBo-6MJ
4	2	37988	Hose .38” X 63” 6FJX-6FJX90°
5	3	3125	Straight Connector, 6MJ-8MP
6	1	32360	Flow Divider Valve
7	3	1277	.31” UNF x 2.25” Hex Capscrew
	3	1502	.31” Lock Washer
8	2	40501	Major Logo, Small
	1	40502	Major Logo, Medium
9	2	14659	Pin, .75” x 4.13”
10	4	1293	.38” UNF x 1.00” Hex Capscrew
	4	1503	.38” Lock Washer
	4	1800	.38” Hard Flat Washer
11	2	40149	Pinch Point Danger Decal
12	1	105770	Fork Positioner Frame
13	3	3434	90° Elbow, 6MBo-6MJ
14	2	14554	Pin, .75” x 2.50”
15	1	105754	Left Fork Positioner Tine, 2” x 4” x 48”
16	2	37262	Hose .25” X 18” 6FJX-6FJX
17	2	100053	Cylinder Assembly
18	1	30137	Tee, 6MJ-6MJ-6MBo
19	1	37421	Hose .25” X 25” 6FJX-6FJX
20	1	37264	Hose .25” X 43” 6FJX-6FJX
21	1	105755	Right Fork Positioner Tine, 2” x 4” x 48”
22	1	33131	Fork Pin, 2.25” x 50”
23	1	14606	Pin Retainer
24	2	1339	.50” UNF x 1.25” Hex Capscrew
	2	1505	.50” Lock Washer
25	1	-----	Serial Number Identification Tag Location
26	1	40151	High Pressure Warning Decal
27	1	3297	Bulkhead Straight Connector, 6MJ-6MJ
28	1	4338	Made in USA Decal
29	2	1550	Hose Tie

M-1011 11-18-05

FORK POSITIONER

48” WIDE (2" x 4" x 60” FORKS) - ASSEMBLY #12679

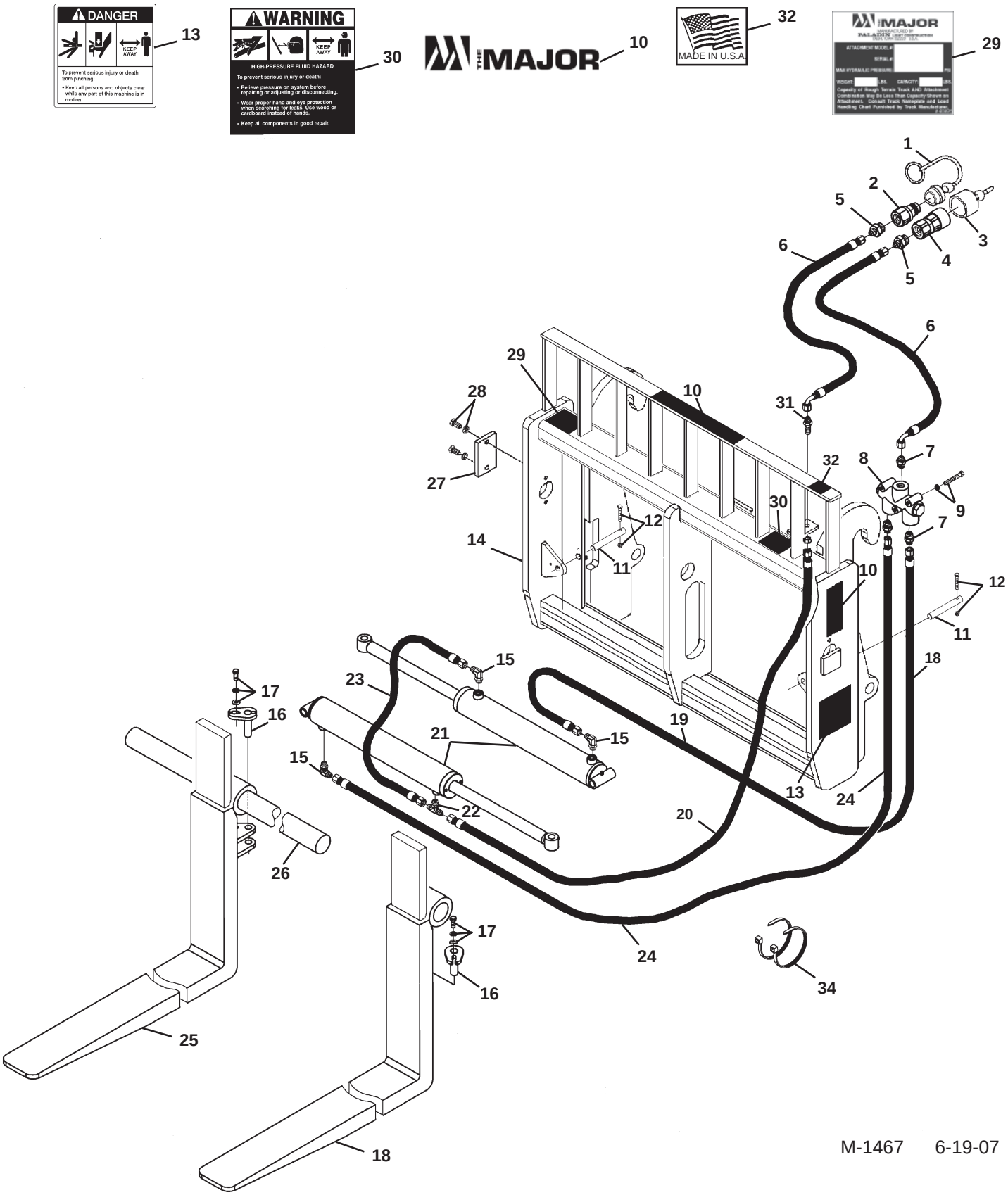

M-1467 6-19-07

FORK POSITIONER

48” WIDE (2" x 4" x 60” FORKS) - ASSEMBLY #12679

ITEM	QTY.	PART NO.	DESCRIPTION
1	1	32549	Dust Cover
2	1	84923	Male Quick Coupler
3	1	32548	Dust Plug
4	1	84928	Female Quick Coupler
5	2	3269	Straight Connector, 8MBo-6MJ
6	2	37802	Hose .38” X 73” 6FJX-6FJX90°
7	3	3125	Straight Connector, 6MJ-8MP
8	1	32360	Flow Divider Valve
9	3	1277	.31” UNF x 2.25” Hex Capscrew
	3	1502	.31” Lock Washer
10	2	40501	Major Logo, Small
	1	40502	Major Logo, Medium
11	2	16330	Pin, .75” x 5.38”
12	2	1276	.31” UNF x 2.00” Hex Capscrew
	2	1942	.31” UNF Deformed Lock Nut
13	2	40149	Pinch Point Danger Decal
14	1	16327	Fork Positioner Frame
15	3	3434	90° Elbow, 6MBo-6MJ
16	2	14554	Pin, .75” x 2.50”
17	2	1293	.38” UNF x 1.00” Hex Capscrew
	2	1503	.38” Lock Washer
	2	1800	.38” Hard Flat Washer
18	1	101416	Fork Positioner Tine, Left, 2” x 4” x 60”
19	1	37803	Hose .25” X 17” 6FJX-6FJX90°
20	1	35694	Hose .25” X 34” 6FJX-6FJX
21	2	100053	Cylinder Assembly
22	1	30137	Tee, 6MJ-6MJ-6MBo
23	1	37421	Hose .25” X 25” 6FJX-6FJX
24	1	37575	Hose .25” X 53” 6FJX-6FJX
25	1	101415	Fork Positioner Tine Right, 2” x 4” x 60”
26	1	33131	Fork Pin, 2.25” x 50.00”
27	1	14606	Pin Retainer
28	2	1339	.50” UNF x 1.25” Hex Capscrew
	2	1505	.50” Lock Washer
29	1	-----	Serial Number Identification Tag Location
30	1	40151	High Pressure Warning Decal
31	1	3297	Bulkhead Straight Connector, 6MJ-6MJ
32	1	4338	Made in USA Decal
33	2	1550	Hose Tie

M-1468 6-19-07

FORK POSITIONER

48” WIDE (2" x 4" x 60” FORKS) - ASSEMBLY #12872

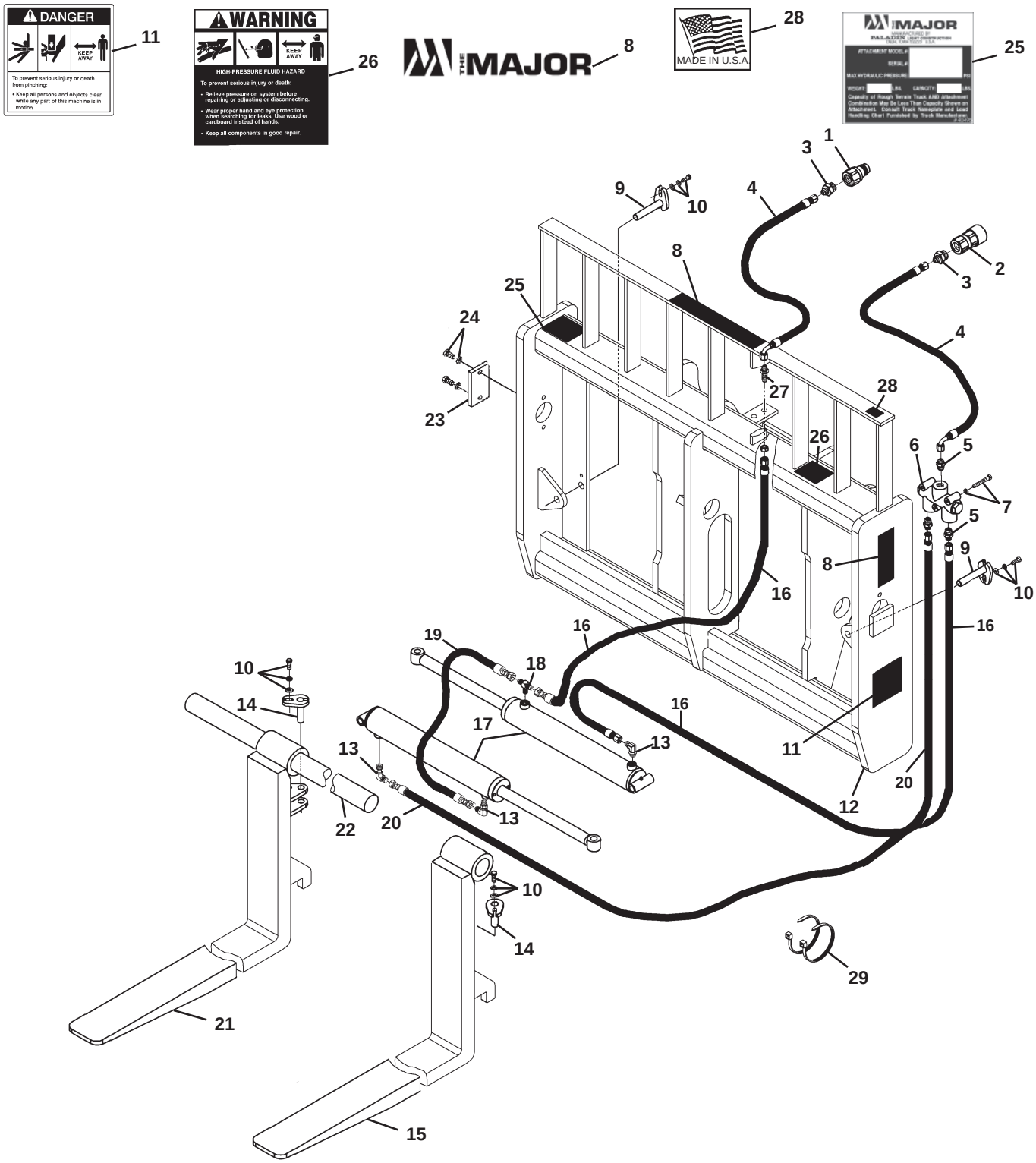

M-1111 11-18-05

FORK POSITIONER

48" WIDE (2" X 4" X 60" FORKS) - ASSEMBLY #12872

ITEM	QTY.	PART NO.	DESCRIPTION
1	1	84923	Male Quick Coupler
2	1	84928	Female Quick Coupler
3	2	3269	Straight Connector, 8MBo-6MJ
4	2	37988	Hose .38” X 63” 6FJX-6FJX90°
5	3	3125	Straight Connector, 6MJ-8MP
6	1	32360	Flow Divider Valve
7	3	1277	.31” UNF x 2.25” Hex Capscrew
	3	1502	.31” Lock Washer
8	2	40501	Major Logo, Small
	1	40502	Major Logo, Medium
9	2	14659	Pin, .75” x 4.13”
10	4	1293	.38” UNF x 1.00” Hex Capscrew
	4	1503	.38” Lock Washer
	4	1800	.38” Hard Flat Washer
11	2	40149	Pinch Point Danger Decal
12	1	106094	Fork Positioner Frame
13	3	3434	90° Elbow, 6MBo-6MJ
14	2	14554	Pin, .75” x 2.50”
15	1	106114	Left Fork Positioner Tine, 2” x 4” x 60”
16	2	37262	Hose .25” X 18” 6FJX-6FJX
17	2	100053	Cylinder Assembly
18	1	30137	Tee, 6MJ-6MJ-6MBo
19	1	37421	Hose .25” X 25” 6FJX-6FJX
20	1	37264	Hose .25” X 43” 6FJX-6FJX
21	1	106115	Right Fork Positioner Tine, 2” x 4” x 60”
22	1	33131	Fork Pin, 2.25” x 50.00”
23	1	14606	Pin Retainer
24	2	1339	.50” UNF x 1.25” Hex Capscrew
	2	1505	.50” Lock Washer
25	1	-----	Serial Number Identification Tag Location
26	1	40151	High Pressure Warning Decal
27	1	3297	Bulkhead Straight Connector, 6MJ-6MJ
28	1	4338	Made in USA Decal
29	2	1550	Hose Tie

M-1112 11-18-05

FORK POSITIONER

48” WIDE (2" x 5" x 48” FORKS) - ASSEMBLY #11311

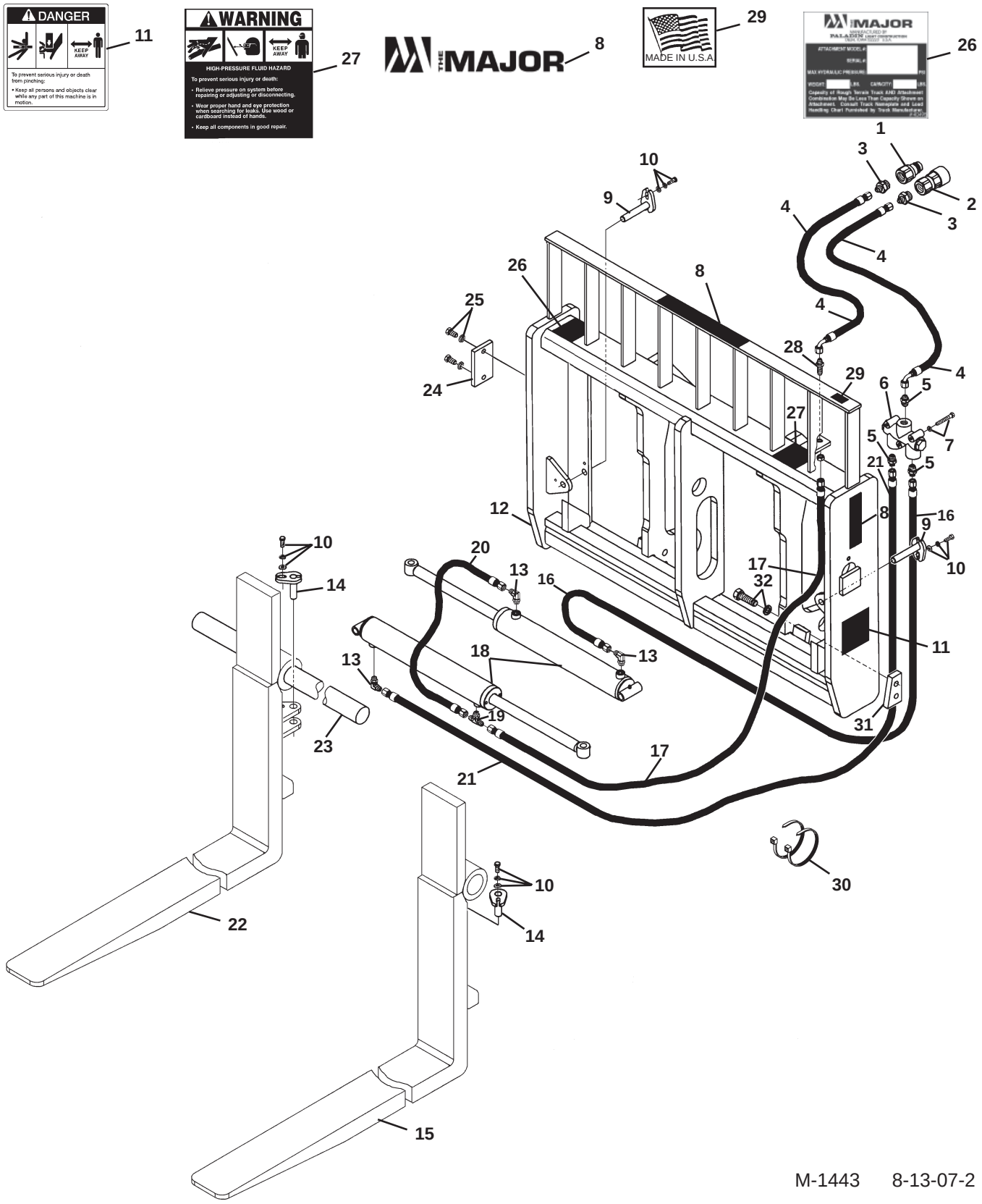

M-1443 8-13-07-2

FORK POSITIONER

48” WIDE (2” x 5” x 48” FORKS) - ASSEMBLY #11311

ITEM	QTY.	PART NO.	DESCRIPTION
1	1	22519	Male Quick Coupler
2	1	22518	Female Quick Coupler
3	2	30201	Straight Connector, 12MBo-6MJ
4	2	37893	Hose .38” X 40” 6FJX-6FJX90°
5	3	3125	Straight Connector, 6MJ-8MP
6	1	32360	Flow Divider Valve
7	3	1277	.31” UNF x 2.25” Hex Capscrew
	3	1502	.31” Lock Washer
8	2	40501	Major Logo, Small
	1	40502	Major Logo, Medium
9	2	14659	Pin, .75” x 4.13”
10	4	1293	.38” UNF x 1.00” Hex Capscrew
	4	1503	.38” Lock Washer
	4	1800	.38” Hard Flat Washer
11	2	40149	Pinch Point Danger Decal
12	1	14580	Fork Positioner Frame
13	3	3434	90° Elbow, 6MBo-6MJ
14	2	14554	Pin, .75” x 2.50”
15	1	14588	Left Fork Positioner Tine, 2” x 5” x 48”
16	1	37803	Hose .25” X 17” 6FJX-6FJX90°
17	1	35694	Hose .25” X 34” 6FJX-6FJX
18	2	100053	Cylinder Assembly
19	1	30137	Tee, 6MJ-6MJ-6MBo
20	1	37421	Hose .25” X 25” 6FJX-6FJX
21	1	37575	Hose .25” X 53” 6FJX-6FJX
22	1	14626	Right Fork Positioner Tine, 2” x 5” x 48”
23	1	33131	Fork Pin, 2.25” x 50.00”
24	1	14606	Pin Retainer
25	2	1339	.50” UNF x 1.25” Hex Capscrew
	2	1505	.50” Lock Washer
26	1	-----	Serial Number Identification Tag Location
27	1	40151	High Pressure Warning Decal
28	1	3297	Bulkhead Straight Connector, 6MJ-6MJ
29	1	4338	Made in USA Decal
30	2	1550	Hose Tie
31	2	14228	Stop Block
32	4	10012	.75” UNC x 2.25” Hex Capscrew, Grade 8
	4	1507	.75” Lock Washer

M-1444 5-30-07-2

FORK POSITIONER

48” WIDE (2" x 5" x 48” FORKS) - ASSEMBLY #12407

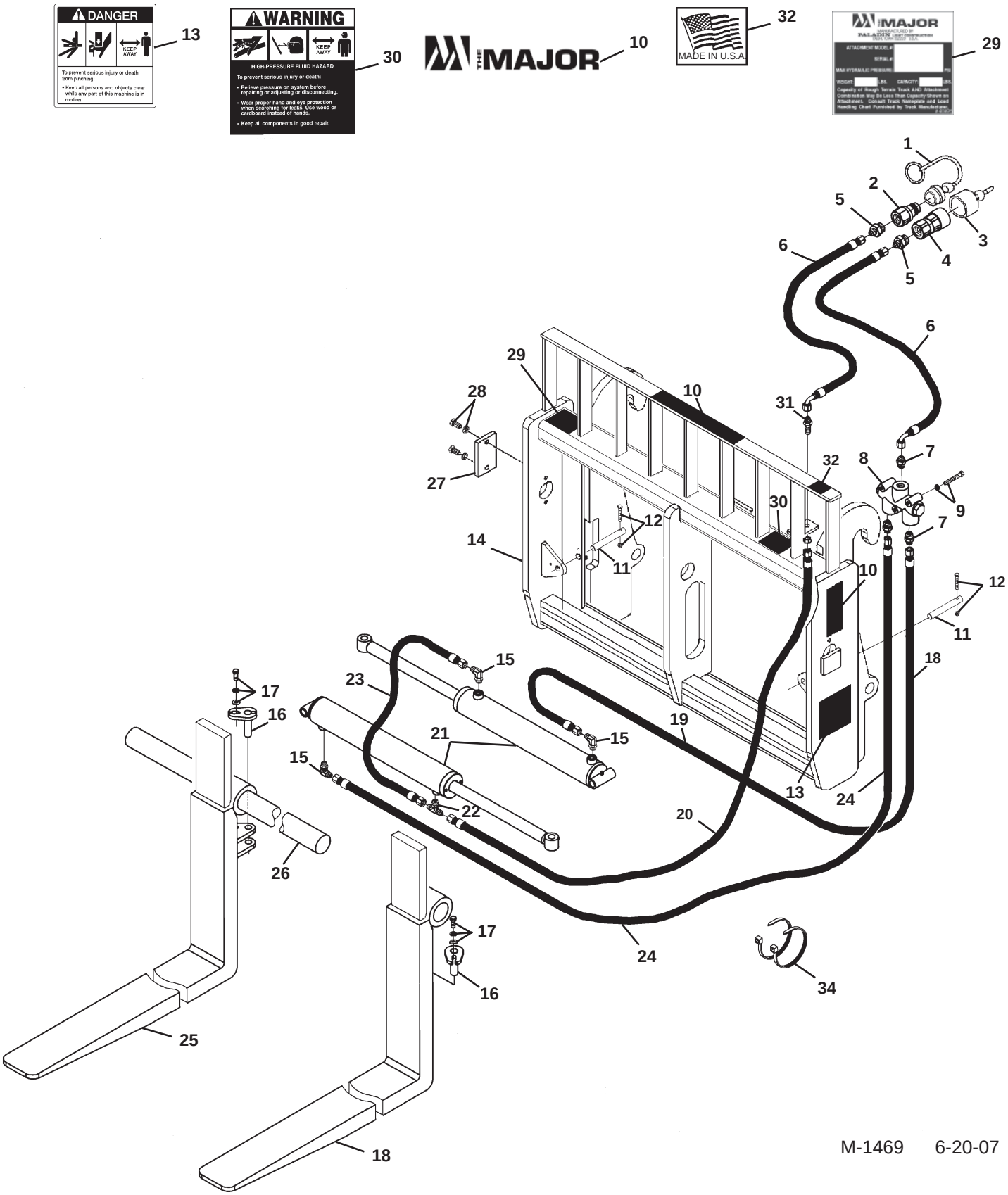

M-1469 6-20-07

FORK POSITIONER

48” WIDE (2" x 5" x 48” FORKS) - ASSEMBLY #12407

ITEM	QTY.	PART NO.	DESCRIPTION
1	1	32549	Dust Cover
2	1	84923	Male Quick Coupler
3	1	32548	Dust Plug
4	1	84928	Female Quick Coupler
5	2	3269	Straight Connector, 8MBo-6MJ
6	2	37802	Hose .38” X 73” 6FJX-6FJX90°
7	3	3125	Straight Connector, 6MJ-8MP
8	1	32360	Flow Divider Valve
9	3	1277	.31” UNF x 2.25” Hex Capscrew
	3	1502	.31” Lock Washer
10	2	40501	Major Logo, Small
	1	40502	Major Logo, Medium
11	2	16330	Pin, .75” x 5.38”
12	2	1276	.31” UNF x 2.00” Hex Capscrew
	2	1942	.31” UNF Deformed Lock Nut
13	2	40149	Pinch Point Danger Decal
14	1	16327	Fork Positioner Frame
15	3	3434	90° Elbow, 6MBo-6MJ
16	2	14554	Pin, .75” x 2.50”
17	2	1293	.38” UNF x 1.00” Hex Capscrew
	2	1503	.38” Lock Washer
	2	1800	.38” Hard Flat Washer
18	1	14588	Fork Positioner Tine, Left, 2” x 5” x 48”
19	1	37803	Hose .25” X 17” 6FJX-6FJX90°
20	1	35694	Hose .25” X 34” 6FJX-6FJX
21	2	100053	Cylinder Assembly
22	1	30137	Tee, 6MJ-6MJ-6MBo
23	1	37421	Hose .25” X 25” 6FJX-6FJX
24	1	37575	Hose .25” X 53” 6FJX-6FJX
25	1	14626	Fork Positioner Tine Right, 2” x 5” x 48”
26	1	33131	Fork Pin, 2.25” x 50.00”
27	1	14606	Pin Retainer
28	2	1339	.50” UNF x 1.25” Hex Capscrew
	2	1505	.50” Lock Washer
29	1	-----	Serial Number Identification Tag Location
30	1	40151	High Pressure Warning Decal
31	1	3297	Bulkhead Straight Connector, 6MJ-6MJ
32	1	4338	Made in USA Decal
33	2	1550	Hose Tie

M-1470 6-20-07

FORK POSITIONER

48” WIDE (2" x 5" x 48” FORKS) - ASSEMBLY #12474

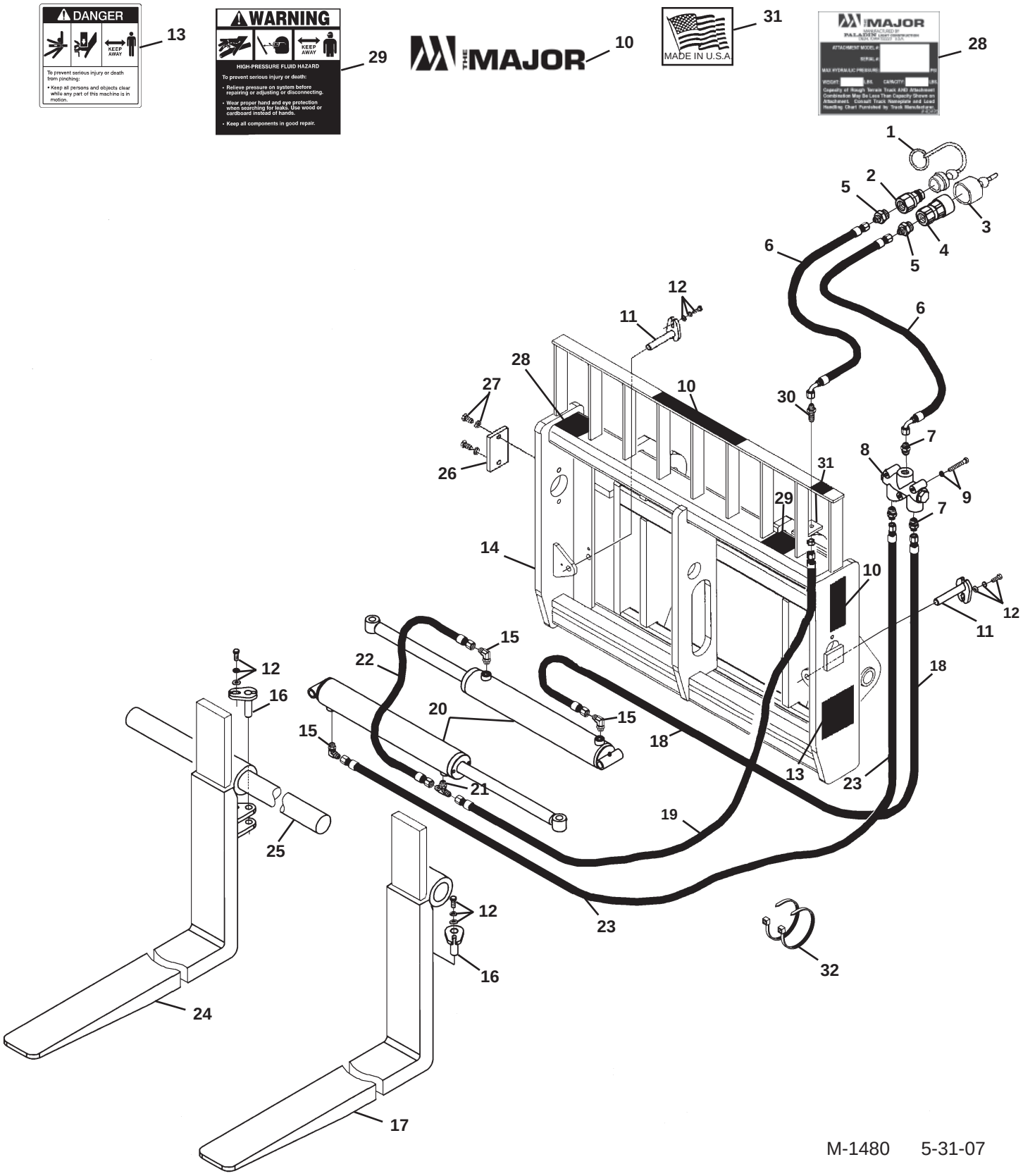

M-1480 5-31-07

FORK POSITIONER

48” WIDE (2" x 5" x 48” FORKS) - ASSEMBLY #12474

ITEM	QTY.	PART NO.	DESCRIPTION
1	1	32549	Dust Cover
2	1	84923	Male Quick Coupler
3	1	32548	Dust Plug
4	1	84928	Female Quick Coupler
5	2	3269	Straight Connector, 8MBo-6MJ
6	2	37802	Hose .38” X 73” 6FJX-6FJX90°
7	3	3125	Straight Connector, 6MJ-8MP
8	1	32360	Flow Divider Valve
9	3	1277	.31” UNF x 2.25” Hex Capscrew
	3	1502	.31” Lock Washer
10	2	40501	Major Logo, Small
	1	40502	Major Logo, Medium
11	2	14659	Pin, .75” x 4.13”
12	4	1293	.38” UNF x 1.00” Hex Capscrew
	4	1503	.38” Lock Washer
	4	1800	.38” Hard Flat Washer
13	2	40149	Pinch Point Danger Decal
14	1	17604	Fork Positioner Frame
15	3	3434	90° Elbow, 6MBo-6MJ
16	2	14554	Pin, .75” x 2.50”
17	1	14588	Left Fork Positioner Tine, 2” x 5” x 48”
18	1	37803	Hose .25” X 17” 6FJX-6FJX90°
19	1	35694	Hose .25” X 34” 6FJX-6FJX
20	2	100053	Cylinder Assembly
21	1	30137	Tee, 6MJ-6MJ-6MBo
22	1	37421	Hose .25” X 25” 6FJX-6FJX
23	1	37575	Hose .25” X 53” 6FJX-6FJX
24	1	14626	Right Fork Positioner Tine, 2” x 5” x 48”
25	1	33131	Fork Pin, 2.25” x 50.00”
26	1	14606	Pin Retainer
27	2	1339	.50” UNF x 1.25” Hex Capscrew
	2	1505	.50” Lock Washer
28	1	-----	Serial Number Identification Tag Location
29	1	40151	High Pressure Warning Decal
30	1	3297	Bulkhead Straight Connector, 6MJ-6MJ
31	1	4338	Made in USA Decal
32	2	1550	Hose Tie

M-1481 5-31-07

FORK POSITIONER

48” WIDE (2" x 5" x 48” FORKS) - ASSEMBLY #12669

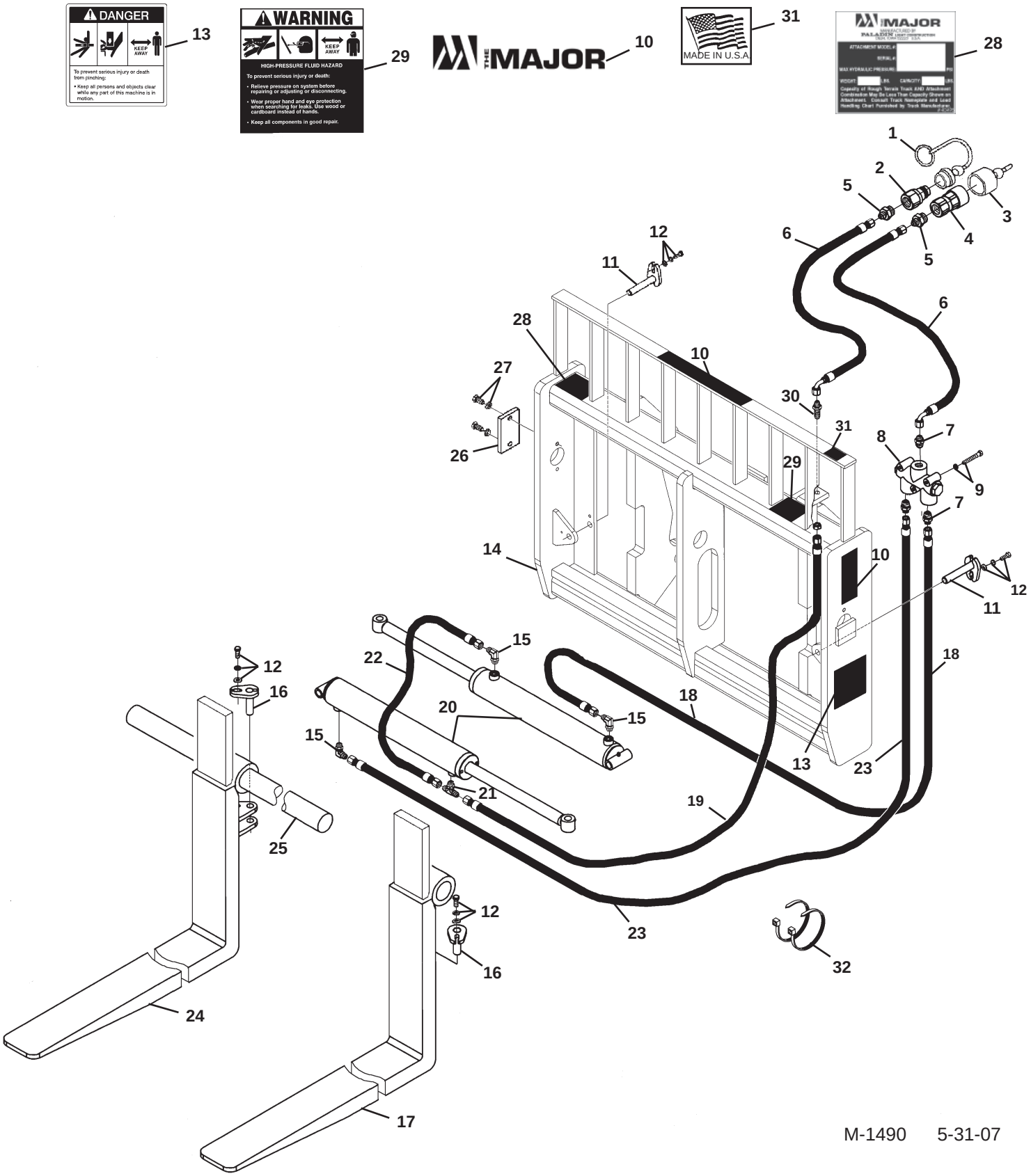

M-1490 5-31-07

FORK POSITIONER

48” WIDE (2” x 5” x 48” FORKS) - ASSEMBLY #12669

ITEM	QTY.	PART NO.	DESCRIPTION
1	1	32549	Dust Cover
2	1	84923	Male Quick Coupler
3	1	32548	Dust Plug
4	1	84928	Female Quick Coupler
5	2	3269	Straight Connector, 8MBo-6MJ
6	2	37802	Hose .38” X 73” 6FJX-6FJX90°
7	3	3125	Straight Connector, 6MJ-8MP
8	1	32360	Flow Divider Valve
9	3	1277	.31” UNF x 2.25” Hex Capscrew
	3	1502	.31” Lock Washer
10	2	40501	Major Logo, Small
	1	40502	Major Logo, Medium
11	2	14659	Pin, .75” x 4.13”
12	4	1293	.38” UNF x 1.00” Hex Capscrew
	4	1503	.38” Lock Washer
	4	1800	.38” Hard Flat Washer
13	2	40149	Pinch Point Danger Decal
14	1	101233	Fork Positioner Frame
15	3	3434	90° Elbow, 6MBo-6MJ
16	2	14554	Pin, .75” x 2.50”
17	1	14588	Left Fork Positioner Tine, 2” x 5” x 48”
18	1	37803	Hose .25” X 17” 6FJX-6FJX90°
19	1	35694	Hose .25” X 34” 6FJX-6FJX
20	2	100053	Cylinder Assembly
21	1	30137	Tee, 6MJ-6MJ-6MBo
22	1	37421	Hose .25” X 25” 6FJX-6FJX
23	1	37575	Hose .25” X 53” 6FJX-6FJX
24	1	14626	Right Fork Positioner Tine, 2” x 5” x 48”
25	1	33131	Fork Pin, 2.25” x 50.00”
26	1	14606	Pin Retainer
27	2	1339	.50” UNF x 1.25” Hex Capscrew
	2	1505	.50” Lock Washer
28	1	-----	Serial Number Identification Tag Location
29	1	40151	High Pressure Warning Decal
30	1	3297	Bulkhead Straight Connector, 6MJ-6MJ
31	1	4338	Made in USA Decal
32	2	1550	Hose Tie

FORK POSITIONER

48” WIDE (2" X 5" X 48” FORKS) - ASSEMBLY #12831

11

26

THE MAJOR

8

28

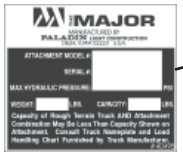

25

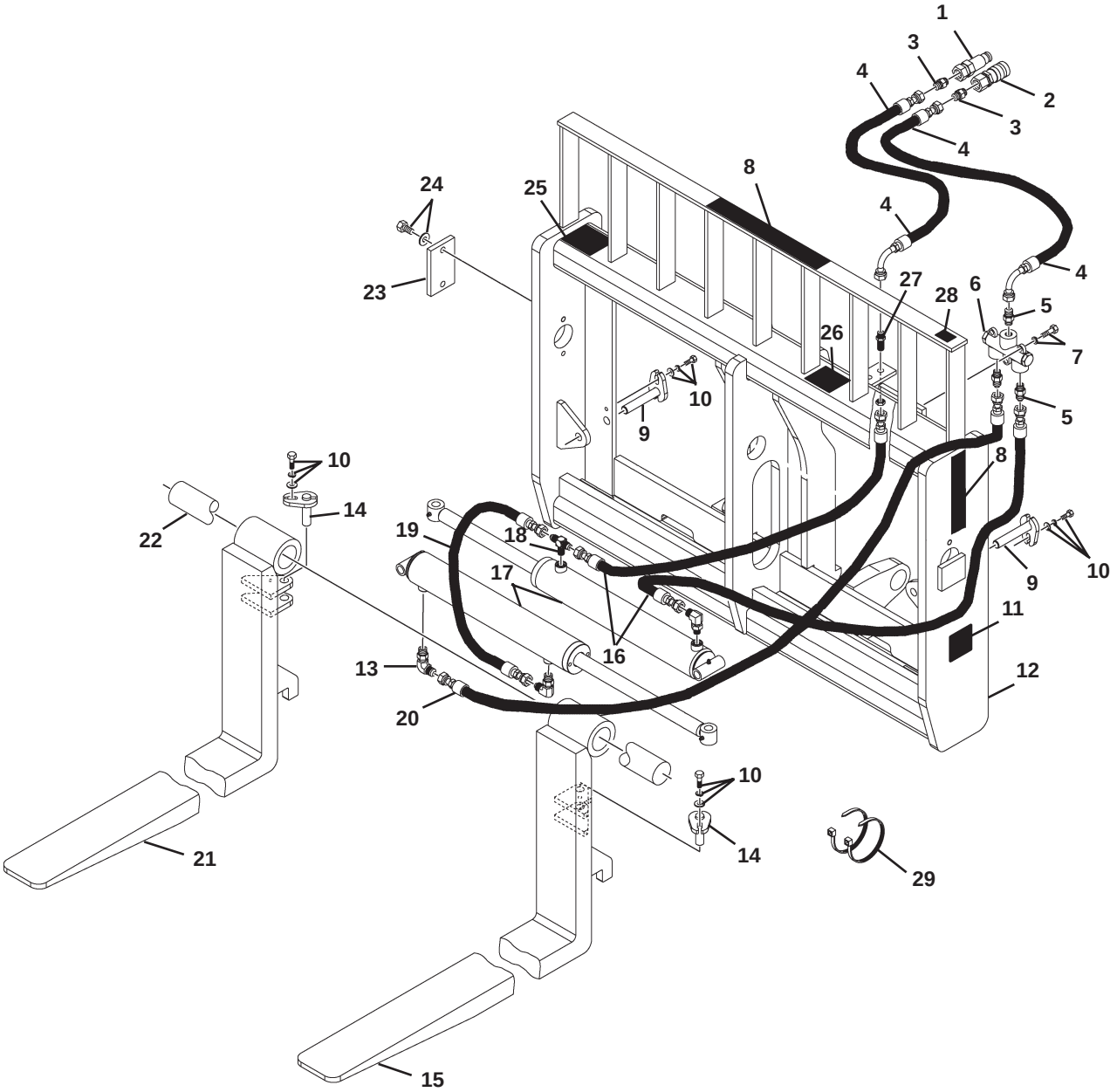

M-1008 5-30-07-2

FORK POSITIONER

48” WIDE (2" X 5" X 48” FORKS) - ASSEMBLY #12831

ITEM	QTY.	PART NO.	DESCRIPTION
1	1	22519	Male Quick Coupler
2	1	22518	Female Quick Coupler
3	2	30201	Straight Connector, 12MBo-6MJ
4	2	37988	Hose .38" X 63" 6FJX-6FJX90°
5	3	3125	Straight Connector, 6MJ-8MP
6	1	32360	Flow Divider Valve
7	3	1277	.31" UNF x 2.25" Hex Capscrew
	3	1502	.31" Lock Washer
8	2	40501	Major Logo, Small
	1	40502	Major Logo, Medium
9	2	14659	Pin, .75" x 4.13"
10	4	1293	.38" UNF x 1.00" Hex Capscrew
	4	1503	.38" Lock Washer
	4	1800	.38" Hard Flat Washer
11	2	40149	Pinch Point Danger Decal
12	1	105763	Fork Positioner Frame
13	3	3434	90° Elbow, 6MBo-6MJ
14	2	14554	Pin, .75" x 2.50"
15	1	105777	Left Fork Positioner Tine, 2" x 5" x 48"
16	2	37262	Hose .25" X 18" 6FJX-6FJX
17	2	100053	Cylinder Assembly
18	1	30137	Tee, 6MJ-6MJ-6MBo
19	1	37421	Hose .25" X 25" 6FJX-6FJX
20	1	38278	Hose .25" X 46" 6FJX-6FJX
21	1	105778	Right Fork Positioner Tine, 2" x 5" x 48"
22	1	33131	Fork Pin, 2.25" x 50.00"
23	1	14606	Pin Retainer
24	2	1505	.50" Lock Washer
	2	1339	.50" UNF x 1.25" Hex Capscrew
25	1	-----	Serial Number Identification Tag Location
26	1	40151	High Pressure Warning Decal
27	1	3297	Bulkhead Straight Connector, 6MJ-6MJ
28	1	4338	Made in USA Decal
29	2	1550	Hose Tie

M-1009 5-30-07-2

FORK POSITIONER

48” WIDE (2" x 5" x 48” FORKS) - ASSEMBLY #12931

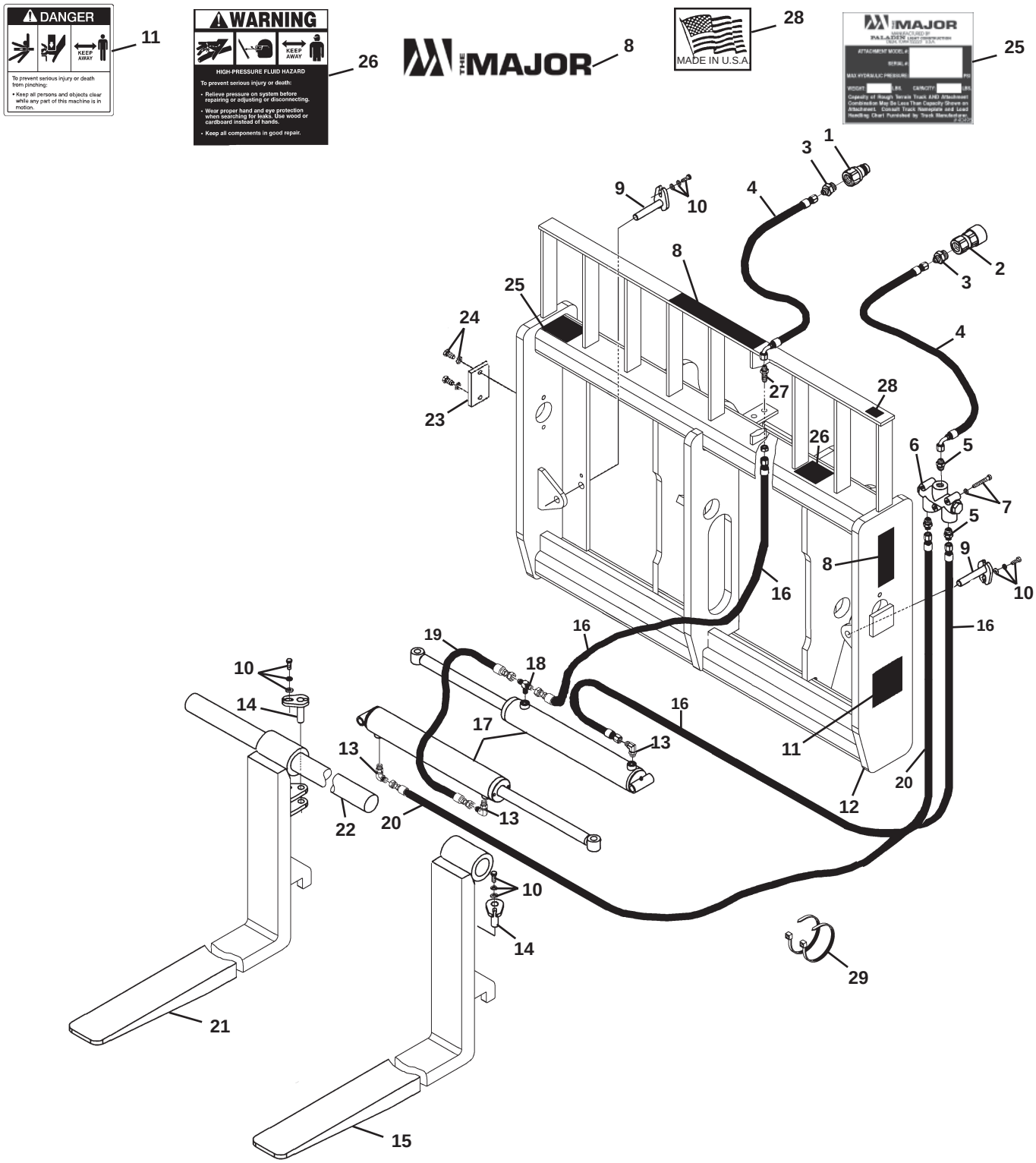

M-1475 5-29-07

FORK POSITIONER

48" WIDE (2" X 5" X 48" FORKS) - ASSEMBLY #12931

ITEM	QTY.	PART NO.	DESCRIPTION
1	1	84923	Male Quick Coupler
2	1	84928	Female Quick Coupler
3	2	3269	Straight Connector, 8MBo-6MJ
4	2	37988	Hose .38” X 63” 6FJX-6FJX90°
5	3	3125	Straight Connector, 6MJ-8MP
6	1	32360	Flow Divider Valve
7	3	1277	.31” UNF x 2.25” Hex Capscrew
	3	1502	.31” Lock Washer
8	2	40501	Major Logo, Small
	1	40502	Major Logo, Medium
9	2	14659	Pin, .75” x 4.13”
10	4	1293	.38” UNF x 1.00” Hex Capscrew
	4	1503	.38” Lock Washer
	4	1800	.38” Hard Flat Washer
11	2	40149	Pinch Point Danger Decal
12	1	106094	Fork Positioner Frame
13	3	3434	90° Elbow, 6MBo-6MJ
14	2	14554	Pin, .75” x 2.50”
15	1	105777	Left Fork Positioner Tine, 2” x 5” x 48”
16	2	37262	Hose .25” X 18” 6FJX-6FJX
17	2	100053	Cylinder Assembly
18	1	30137	Tee, 6MJ-6MJ-6MBo
19	1	37421	Hose .25” X 25” 6FJX-6FJX
20	1	37264	Hose .25” X 43” 6FJX-6FJX
21	1	105778	Right Fork Positioner Tine, 2” x 5” x 48”
22	1	33131	Fork Pin, 2.25” x 50.00”
23	1	14606	Pin Retainer
24	2	1339	.50” UNF x 1.25” Hex Capscrew
	2	1505	.50” Lock Washer
25	1	-----	Serial Number Identification Tag Location
26	1	40151	High Pressure Warning Decal
27	1	3297	Bulkhead Straight Connector, 6MJ-6MJ
28	1	4338	Made in USA Decal
29	2	1550	Hose Tie

M-1476 5-29-07

FORK POSITIONER

48” WIDE (2" x 5" x 48” FORKS) - ASSEMBLY #12952

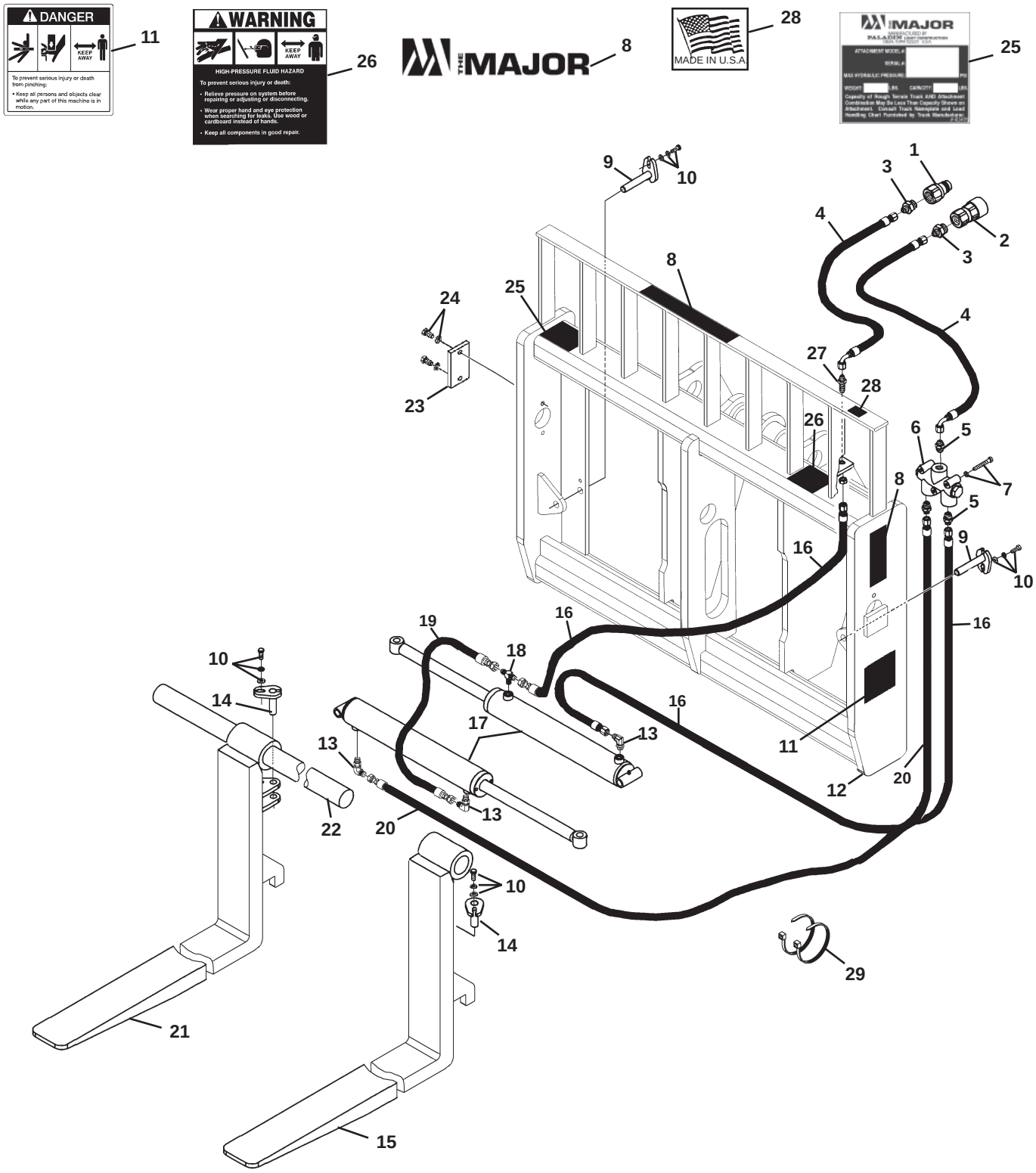

M-1478 5-29-07

FORK POSITIONER

48" WIDE (2" X 5" X 48" FORKS) - ASSEMBLY #12952

ITEM	QTY.	PART NO.	DESCRIPTION
1	1	84923	Male Quick Coupler
2	1	84928	Female Quick Coupler
3	2	3269	Straight Connector, 8MBo-6MJ
4	2	37988	Hose .38” X 63” 6FJX-6FJX90°
5	3	3125	Straight Connector, 6MJ-8MP
6	1	32360	Flow Divider Valve
7	3	1277	.31” UNF x 2.25” Hex Capscrew
	3	1502	.31” Lock Washer
8	2	40501	Major Logo, Small
	1	40502	Major Logo, Medium
9	2	14659	Pin, .75” x 4.13”
10	4	1293	.38” UNF x 1.00” Hex Capscrew
	4	1503	.38” Lock Washer
	4	1800	.38” Hard Flat Washer
11	2	40149	Pinch Point Danger Decal
12	1	107840	Fork Positioner Frame
13	3	3434	90° Elbow, 6MBo-6MJ
14	2	14554	Pin, .75” x 2.50”
15	1	105777	Left Fork Positioner Tine, 2” x 5” x 48”
16	2	38276	Hose .25” X 19” 6FJX-6FJX
17	2	100053	Cylinder Assembly
18	1	30137	Tee, 6MJ-6MJ-6MBo
19	1	37421	Hose .25” X 25” 6FJX-6FJX
20	1	35807	Hose .25” X 50” 6FJX-6FJX
21	1	105778	Right Fork Positioner Tine, 2” x 5” x 48”
22	1	33131	Fork Pin, 2.25” x 50.00”
23	1	14606	Pin Retainer
24	2	1339	.50” UNF x 1.25” Hex Capscrew
	2	1505	.50” Lock Washer
25	1	-----	Serial Number Identification Tag Location
26	1	40151	High Pressure Warning Decal
27	1	3297	Bulkhead Straight Connector, 6MJ-6MJ
28	1	4338	Made in USA Decal
29	2	1550	Hose Tie

M-1479 5-29-07

FORK POSITIONER

48” WIDE (2" x 5" x 60” FORKS) - ASSEMBLY #12444

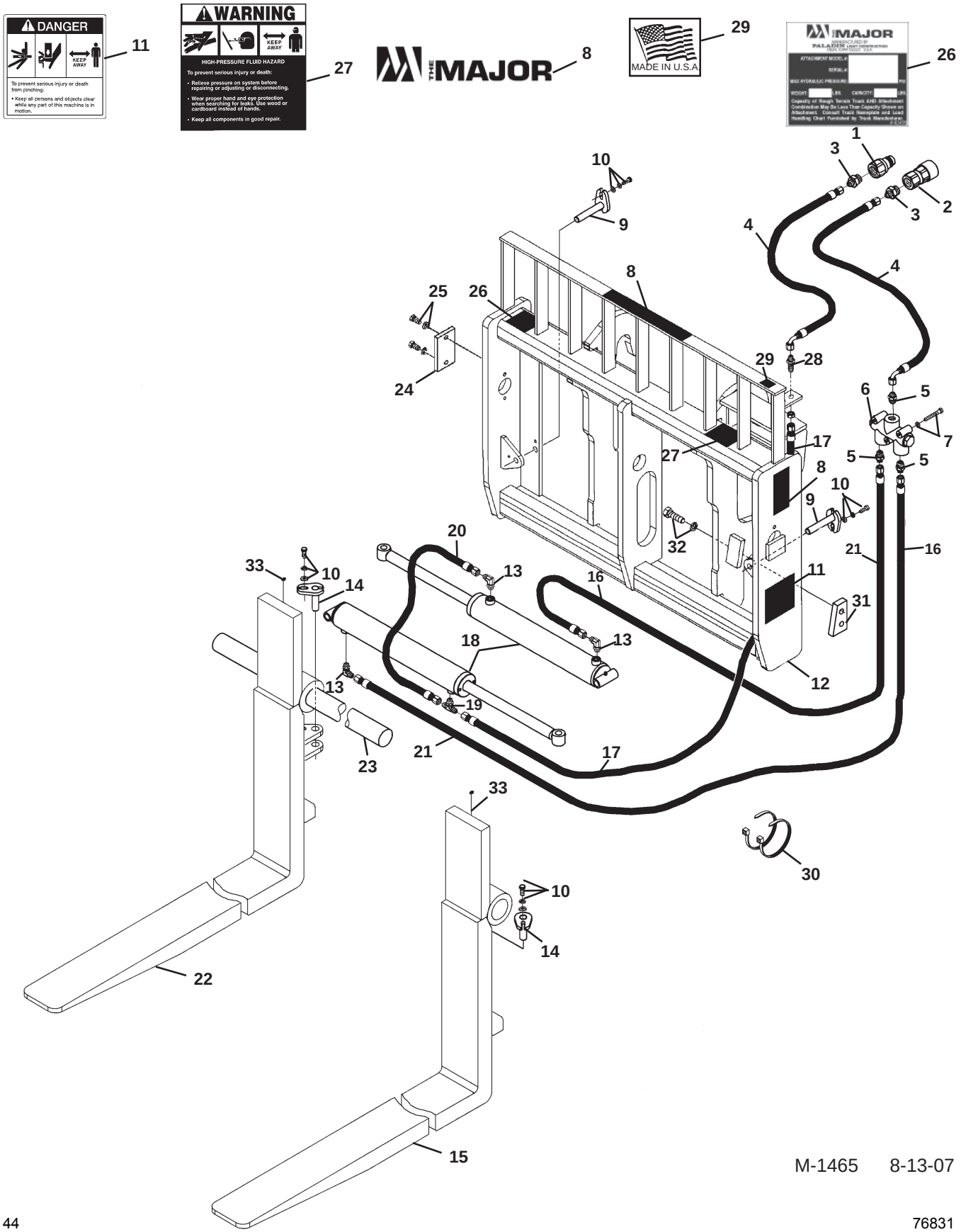

M-1465 8-13-07

FORK POSITIONER

48” WIDE (2" x 5" x 60” FORKS) - ASSEMBLY #12444

ITEM	QTY.	PART NO.	DESCRIPTION
1	1	22519	Male Quick Coupler
2	1	22518	Female Quick Coupler
3	2	30201	Straight Connector, 12MBo-6MJ
4	2	37897	Hose .38” X 52” 6FJX-6FJX90°
5	3	3125	Straight Connector, 6MJ-8MP
6	1	32360	Flow Divider Valve
7	3	1277	.31” UNF x 2.25” Hex Capscrew
	3	1502	.31” Lock Washer
8	2	40501	Major Logo, Small
	1	40502	Major Logo, Medium
9	2	14659	Pin, .75” x 4.13”
10	4	1293	.38” UNF x 1.00” Hex Capscrew
	4	1503	.38” Lock Washer
	4	1800	.38” Hard Flat Washer
11	2	40149	Pinch Point Danger Decal
12	1	16983	Fork Positioner Frame
13	3	3434	90° Elbow, 6MBo-6MJ
14	2	14554	Pin, .75” x 2.50”
15	1	17192	Left Fork Positioner Tine, 2” x 5” x 60”
16	1	37803	Hose .25” X 17” 6FJX-6FJX90°
17	1	35694	Hose .25” X 34” 6FJX-6FJX
18	2	100053	Cylinder Assembly
19	1	30137	Tee, 6MJ-6MJ-6MBo
20	1	37421	Hose .25” X 25” 6FJX-6FJX
21	1	37575	Hose .25” X 53” 6FJX-6FJX
22	1	17191	Right Fork Positioner Tine, 2” x 5” x 60”
23	1	33131	Fork Pin, 2.25” x 50.00”
24	1	14606	Pin Retainer
25	2	1339	.50” UNF x 1.25” Hex Capscrew
	2	1505	.50” Lock Washer
26	1	-----	Serial Number Identification Tag Location
27	1	40151	High Pressure Warning Decal
28	1	3297	Bulkhead Straight Connector, 6MJ-6MJ
29	1	4338	Made in USA Decal
30	2	1550	Hose Tie
31	2	14228	Stop Block
32	4	10012	.75” UNC x 2.25” Hex Capscrew, Grade 8
	4	1507	.75” Lock Washer
33	2	9371	Grease Zerk

M-1466 5-30-07

FORK POSITIONER

48” WIDE (2" x 5" x 60” FORKS) - ASSEMBLY #12960

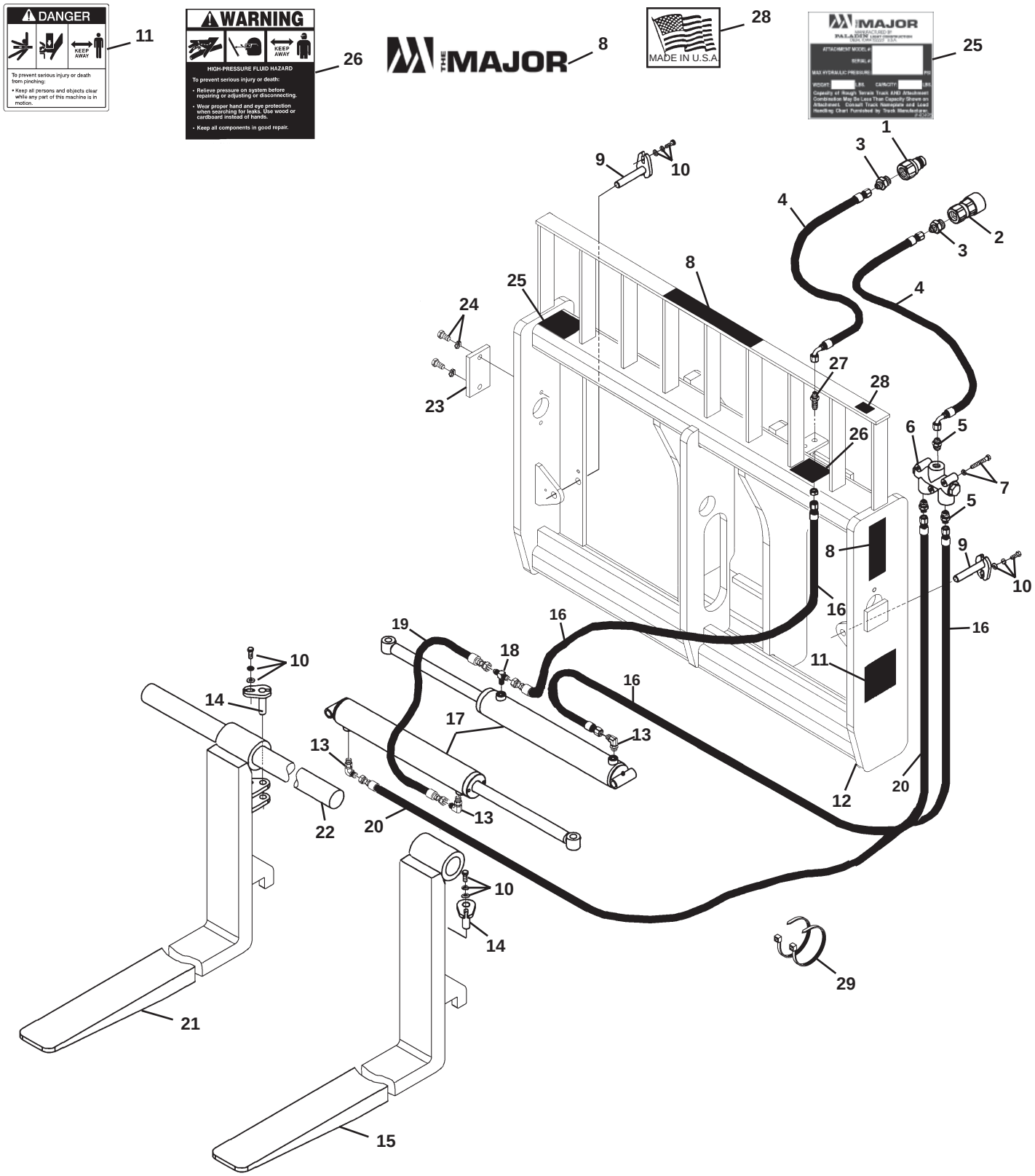

M-1488 5-29-07

FORK POSITIONER

48" WIDE (2" X 5" X 60" FORKS) - ASSEMBLY #12960

ITEM	QTY.	PART NO.	DESCRIPTION
1	1	84982	Male Quick Coupler
2	1	84983	Female Quick Coupler
3	2	30201	Straight Connector, 12MBo-6MJ
4	2	37988	Hose .38” X 63” 6FJX-6FJX90°
5	3	3125	Straight Connector, 6MJ-8MP
6	1	32360	Flow Divider Valve
7	3	1277	.31” UNF x 2.25” Hex Capscrew
	3	1502	.31” Lock Washer
8	2	40501	Major Logo, Small
	1	40502	Major Logo, Medium
9	2	14659	Pin, .75” x 4.13”
10	4	1293	.38” UNF x 1.00” Hex Capscrew
	4	1503	.38” Lock Washer
	4	1800	.38” Hard Flat Washer
11	2	40149	Pinch Point Danger Decal
12	1	108107	Fork Positioner Frame
13	3	3434	90° Elbow, 6MBo-6MJ
14	2	14554	Pin, .75” x 2.50”
15	1	105841	Left Fork Positioner Tine, 2” x 5” x 60”
16	2	37262	Hose .25” X 18” 6FJX-6FJX
17	2	100053	Cylinder Assembly
18	1	30137	Tee, 6MJ-6MJ-6MBo
19	1	37421	Hose .25” X 25” 6FJX-6FJX
20	1	37264	Hose .25” X 43” 6FJX-6FJX
21	1	105842	Right Fork Positioner Tine, 2” x 5” x 60”
22	1	33131	Fork Pin, 2.25” x 50.00”
23	1	14606	Pin Retainer
24	2	1339	.50” UNF x 1.25” Hex Capscrew
	2	1505	.50” Lock Washer
25	1	-----	Serial Number Identification Tag Location
26	1	40151	High Pressure Warning Decal
27	1	3297	Bulkhead Straight Connector, 6MJ-6MJ
28	1	4338	Made in USA Decal
29	2	1550	Hose Tie

M-1489 5-29-07

FORK POSITIONER

48” WIDE (2" x 5" x 72” FORKS) - ASSEMBLY #12634

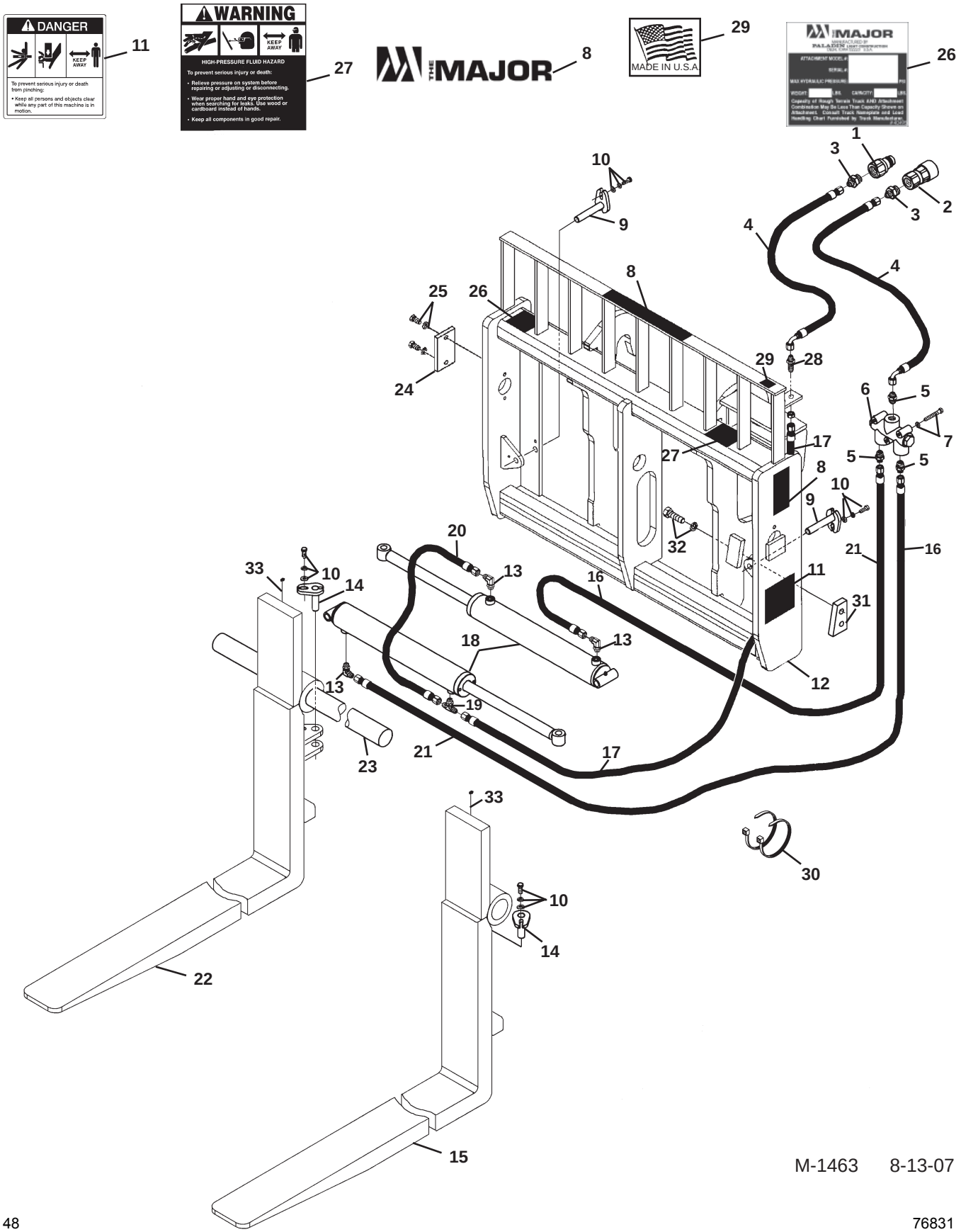

M-1463 8-13-07

FORK POSITIONER

48” WIDE (2" x 5" x 72” FORKS) - ASSEMBLY #12634

ITEM	QTY.	PART NO.	DESCRIPTION
1	1	22519	Male Quick Coupler
2	1	22518	Female Quick Coupler
3	2	30201	Straight Connector, 12MBo-6MJ
4	2	37897	Hose .38” X 52” 6FJX-6FJX90°
5	3	3125	Straight Connector, 6MJ-8MP
6	1	32360	Flow Divider Valve
7	3	1277	.31” UNF x 2.25” Hex Capscrew
	3	1502	.31” Lock Washer
8	2	40501	Major Logo, Small
	1	40502	Major Logo, Medium
9	2	14659	Pin, .75” x 4.13”
10	4	1293	.38” UNF x 1.00” Hex Capscrew
	4	1503	.38” Lock Washer
	4	1800	.38” Hard Flat Washer
11	2	40149	Pinch Point Danger Decal
12	1	16983	Fork Positioner Frame
13	3	3434	90° Elbow, 6MBo-6MJ
14	2	14554	Pin, .75” x 2.50”
15	1	12635	Left Fork Positioner Tine, 2” x 5” x 72”
16	1	37803	Hose .25” X 17” 6FJX-6FJX90°
17	1	35694	Hose .25” X 34” 6FJX-6FJX
18	2	100053	Cylinder Assembly
19	1	30137	Tee, 6MJ-6MJ-6MBo
20	1	37421	Hose .25” X 25” 6FJX-6FJX
21	1	37575	Hose .25” X 53” 6FJX-6FJX
22	1	12636	Right Fork Positioner Tine, 2” x 5” x 72”
23	1	33131	Fork Pin, 2.25” x 50.00”
24	1	14606	Pin Retainer
25	2	1339	.50” UNF x 1.25” Hex Capscrew
	2	1505	.50” Lock Washer
26	1	-----	Serial Number Identification Tag Location
27	1	40151	High Pressure Warning Decal
28	1	3297	Bulkhead Straight Connector, 6MJ-6MJ
29	1	4338	Made in USA Decal
30	2	1550	Hose Tie
31	2	14228	Stop Block
32	4	10012	.75” UNC x 2.25” Hex Capscrew, Grade 8
	4	1507	.75” Lock Washer
33	2	9371	Grease Zerk

M-1464 5-30-07

SIDE SHIFT FORK POSITIONER

48” WIDE (2" X 5" x 48” FORKS) - ASSEMBLY #11329

30

19

THE MAJOR 18

21

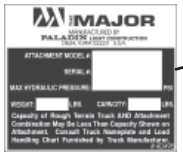

16

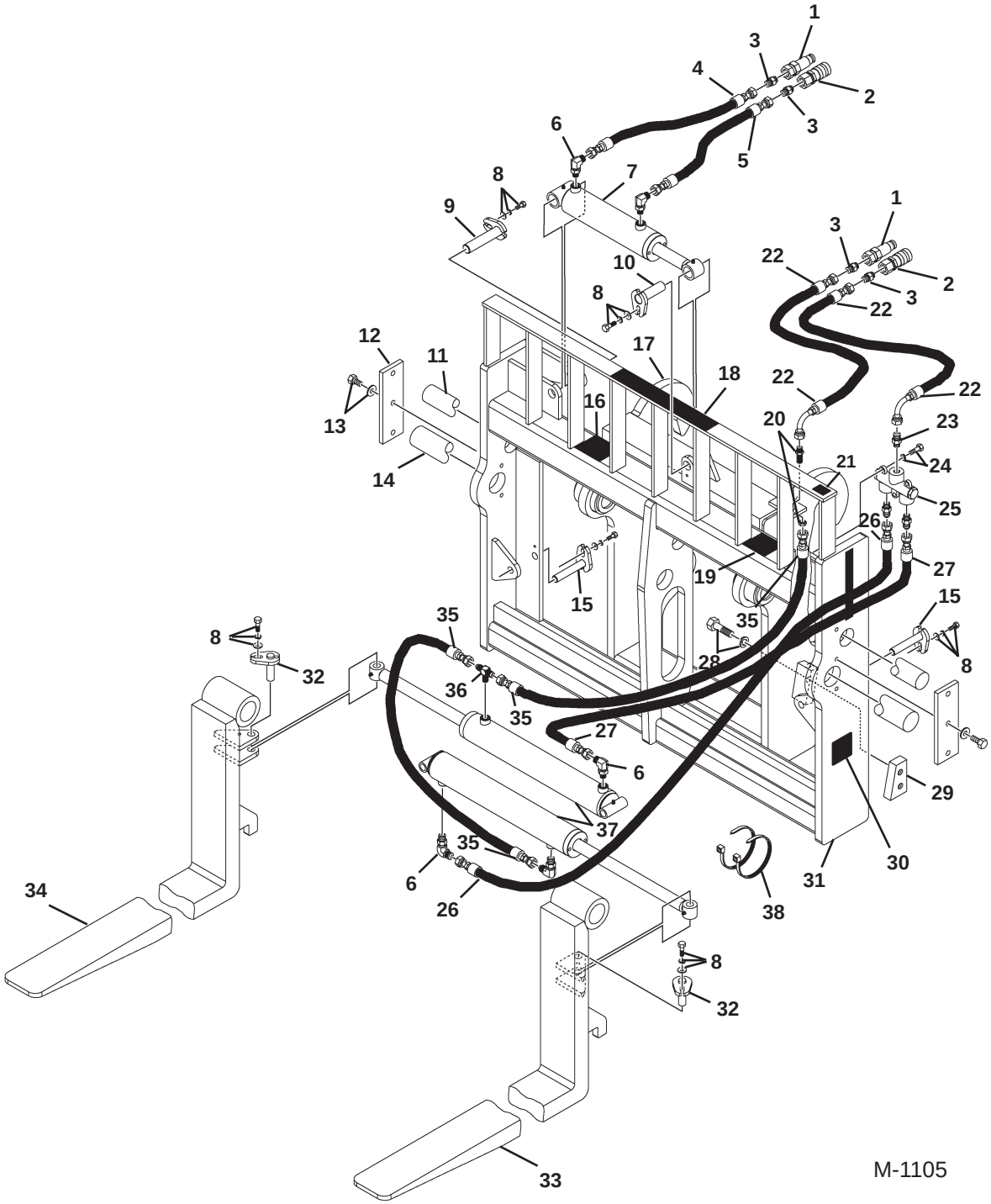

M-1105 11-18-05

SIDE SHIFT FORK POSITIONER

48” WIDE (2" X 5" x 48” FORKS) - ASSEMBLY #11329

ITEM	QTY.	PART NO.	DESCRIPTION
1	2	22519	Male Quick Coupler
2	2	22518	Female Quick Coupler
3	4	30201	Straight Connector, 12MBo-6MJ
4	1	37839	Hose .38” X 50” 6FJX-6FJX
5	1	37492	Hose .38” X 40” 6FJX-6FJX
6	5	3434	90° Elbow, 6MBo-6MJ
7	1	88928	Cylinder Assembly
8	6	1293	.38” UNF x 1.00” Hex Capscrew
	6	1503	.38” Lock Washer
	6	1800	.38” Hard Flat Washer
9	1	14173	Pin, 1.00” x 4.63”
10	1	14174	Pin, 1.00” x 2.69”
11	1	24506	Fork Pin, 2.00” x 49.50”
12	2	100241	Pin Retainer
13	6	1089	.50” UNC x 1.25” Hex Capscrew
	6	1505	.50” Lock Washer
14	1	33131	Fork Pin, 2.25” x 50.00”
15	2	14659	Pin, .75” x 4.13”
16	1	-----	Serial Number Identification Tag Location
17	1	104762	Rear Frame
18	2	40501	Major Logo, Small
	1	40502	Major Logo, Medium
19	1	40151	High Pressure Warning Decal
20	1	3297	Bulkhead Straight Connector, 6MJ-6MJ
21	1	4338	Made in USA Decal
22	2	37893	Hose .38” X 40” 6FJX-6FJX90°
23	3	3125	Straight Connector, 6MJ-8MP
24	3	1277	.31” UNF x 2.25” Hex Capscrew
	3	1502	.31” Lock Washer
25	1	32360	Flow Divider Valve
26	1	37575	Hose .25” X 53” 6FJX-6FJX
27	1	38276	Hose .25” X 19” 6FJX-6FJX
28	4	10012	.75” UNC x 2.25” Hex Capscrew, Grade 8
	4	1507	.75” Lock Washer
29	2	14228	Stop Block
30	2	40149	Pinch Point Danger Decal
31	1	104761	Fork Positioner Frame
32	2	14554	Pin, .75” x 2.50”
33	1	105777	Left Fork Positioner Tine, 2” x 5” x 48”
34	1	105778	Right Fork Positioner Tine, 2” x 5” x 48”
35	2	37421	Hose .25” X 25” 6FJX-6FJX
36	1	30137	Tee, 6MJ-6MJ-6MBo
37	2	100053	Cylinder Assembly
38	2	1550	Hose Tie

M-1106 11-18-05

SIDE SHIFT FORK POSITIONER

48” WIDE (2" X 5" X 60” FORKS) - ASSEMBLY #12830

30

19

THE MAJOR

18

21

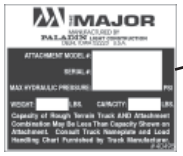

16

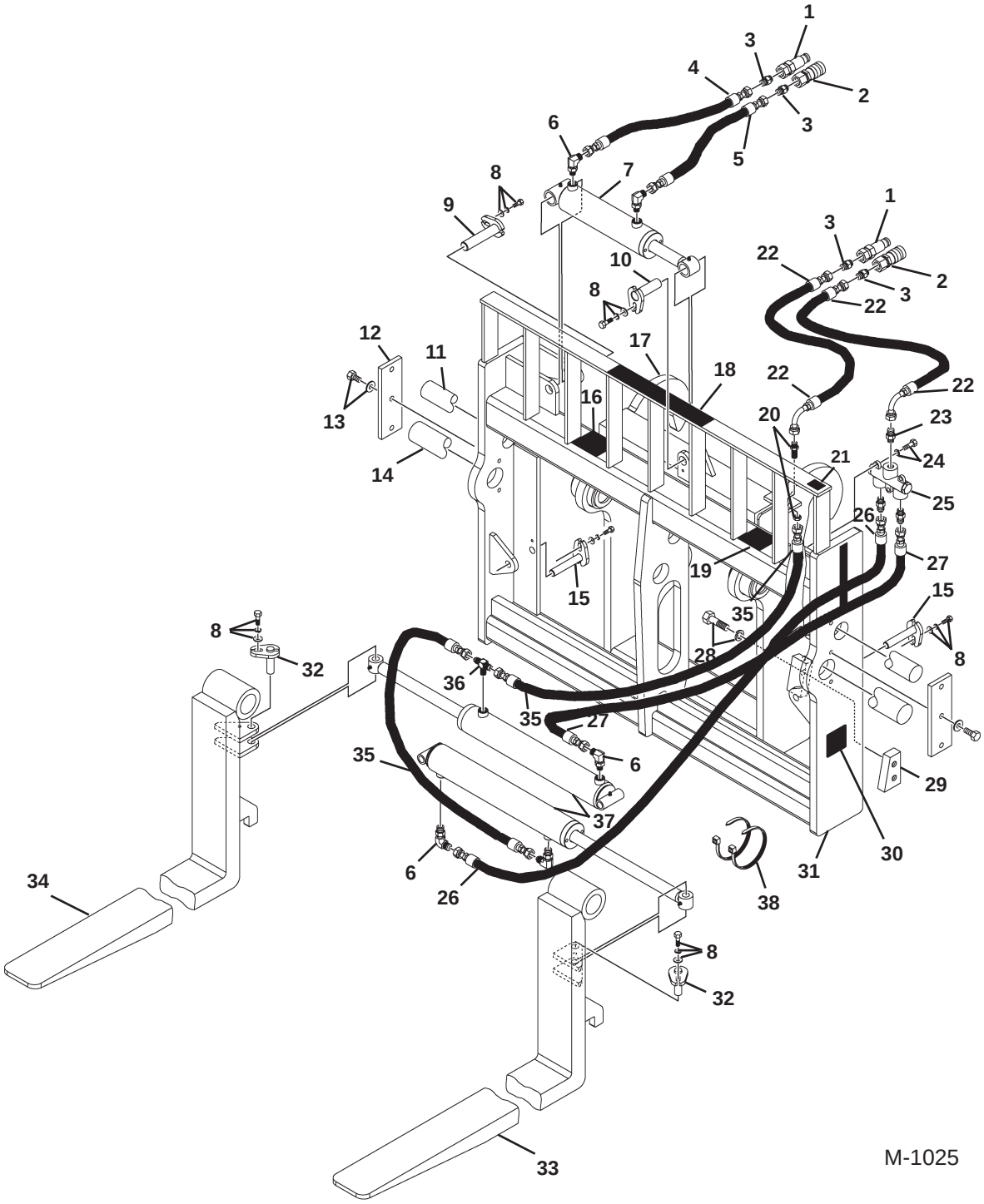

M-1025 11-18-05

SIDE SHIFT FORK POSITIONER

48” WIDE (2" X 5" X 60” FORKS) - ASSEMBLY #12830

ITEM	QTY.	PART NO.	DESCRIPTION
1	2	22519	Male Quick Coupler
2	2	22518	Female Quick Coupler
3	4	30201	Straight Connector, 12MBo-6MJ
4	1	37839	Hose .38” X 50” 6FJX-6FJX
5	1	37492	Hose .38” X 40” 6FJX-6FJX
6	5	3434	90° Elbow, 6MBo-6MJ
7	1	88928	Cylinder Assembly
8	6	1293	.38” UNF x 1.00” Hex Capscrew
	6	1503	.38” Lock Washer
	6	1800	.38” Hard Flat Washer
9	1	14173	Pin, 1.00” x 4.63”
10	1	14174	Pin, 1.00” x 2.69”
11	1	24506	Fork Pin, 2.00” x 49.50”
12	2	100241	Pin Retainer
13	6	1089	.50” UNC x 1.25” Hex Capscrew
	6	1505	.50” Lock Washer
14	1	33131	Fork Pin, 2.25” x 50.00”
15	2	14659	Pin, .75” x 4.13”
16	1	-----	Serial Number Identification Tag Location
17	1	104762	Rear Frame
18	2	40501	Major Logo, Small
	1	40502	Major Logo, Medium
19	1	40151	High Pressure Warning Decal
20	1	3297	Bulkhead Straight Connector, 6MJ-6MJ
21	1	4338	Made in USA Decal
22	2	37893	Hose .38” X 40” 6FJX-6FJX90°
23	3	3125	Straight Connector, 6MJ-8MP
24	3	1277	.31” UNF x 2.25” Hex Capscrew
	3	1502	.31” Lock Washer
25	1	32360	Flow Divider Valve
26	1	37575	Hose .25” X 53” 6FJX-6FJX
27	1	38276	Hose .25” X 19” 6FJX-6FJX
28	4	10012	.75” UNC x 2.25” Hex Capscrew, Grade 8
	4	1507	.75” Lock Washer
29	2	14228	Stop Block
30	2	40149	Pinch Point Danger Decal
31	1	104761	Fork Positioner Frame
32	2	14554	Pin, .75” x 2.50”
33	1	105841	Left Fork Positioner Tine, 2” x 5” x 60”
34	1	105842	Right Fork Positioner Tine, 2” x 5” x 60”
35	2	37421	Hose .25” X 25” 6FJX-6FJX
36	1	30137	Tee, 6MJ-6MJ-6MBo
37	2	100053	Cylinder Assembly
38	2	1550	Hose Tie

M-1026 11-18-05

FORK POSITIONER

50” WIDE (2" X 4" X 42” FORKS) - ASSEMBLY #13007

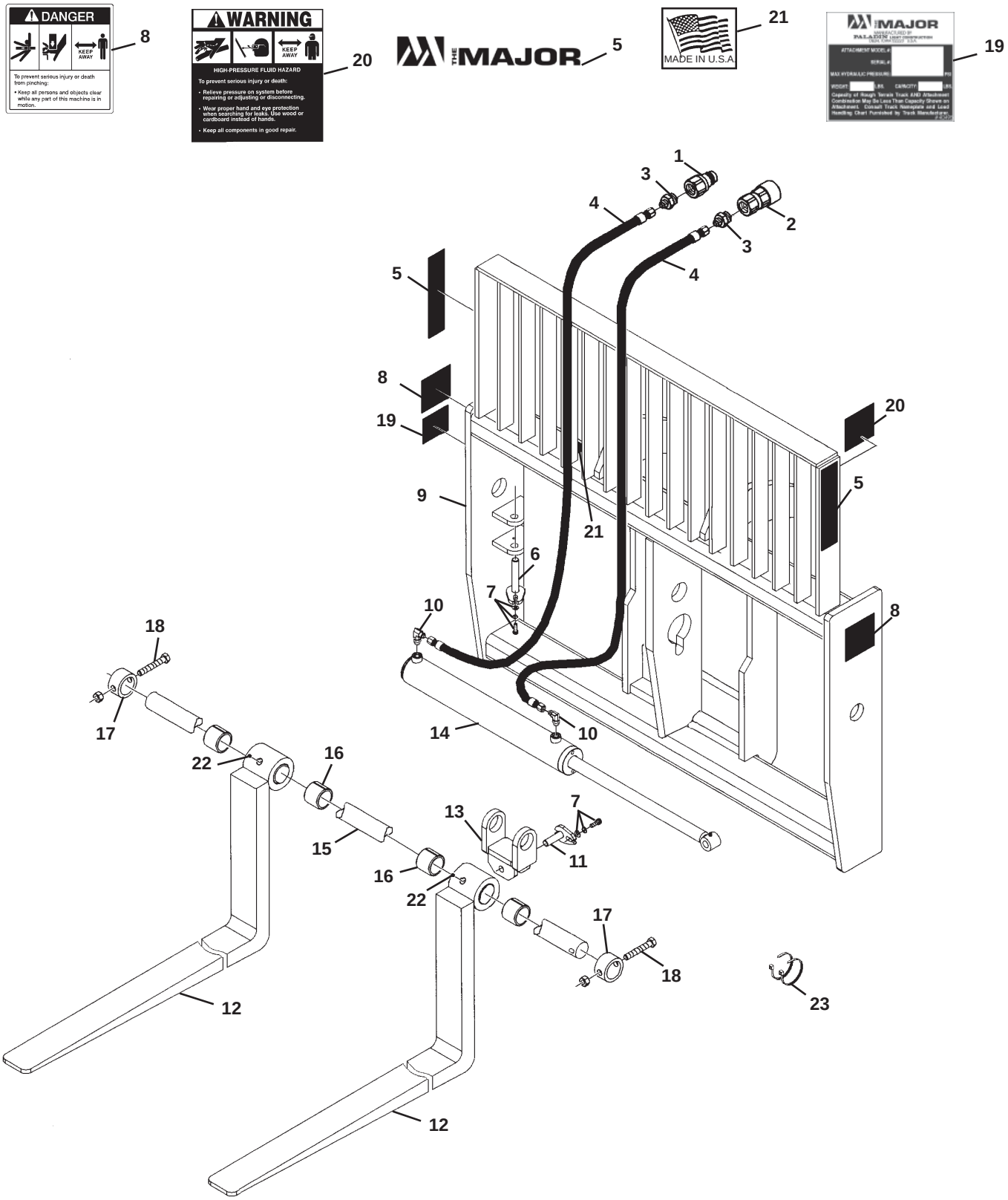

M-1533 8-14-07

FORK POSITIONER

50” WIDE (2" X 4" X 42” FORKS) - ASSEMBLY #13007

ITEM	QTY.	PART NO.	DESCRIPTION
1	1	22519	Male Quick Coupler
2	1	22518	Female Quick Coupler
3	2	30201	Straight Connector, 12MBo-6MJ
4	2	37960	Hose .38" X 64" 6FJX-6FJX
5	2	40501	Major Logo, Small
6	1	14659	Pin, .75" x 4.13"
7	2	1043	.38" UNC x 1.00" Hex Capscrew
	2	1503	.38" Lock Washer
	2	1800	.38" Hard Flat Washer
8	2	40149	Pinch Point Danger Decal
9	1	109652	Fork Positioner Frame
10	2	3434	90° Elbow, 6MBo-6MJ
11	1	14554	Pin, .75" x 2.50"
12	2	109543	Fork Positioner Tine, 2" x 4" x 42"
13	1	109639	Clevis
14	1	109546	Cylinder Assembly
15	1	18508	Fork Pin, 2.00" x 54.38"
16	4	31122	Bushing
17	2	18509	Lock Collar
18	2	1839	.62" UNC Deformed Lock Nut
	2	1124	.62" UNC x 4.00" Hex Capscrew
19	1	-----	Serial Number Identification Tag Location
20	1	40151	High Pressure Warning Decal
21	1	4338	Made in USA Decal
22	2	6616	Grease Zerk
23	4	7104	Hose Tie

FORK POSITIONER

50” WIDE (2" X 4" X 48” FORKS) - ASSEMBLY #13046

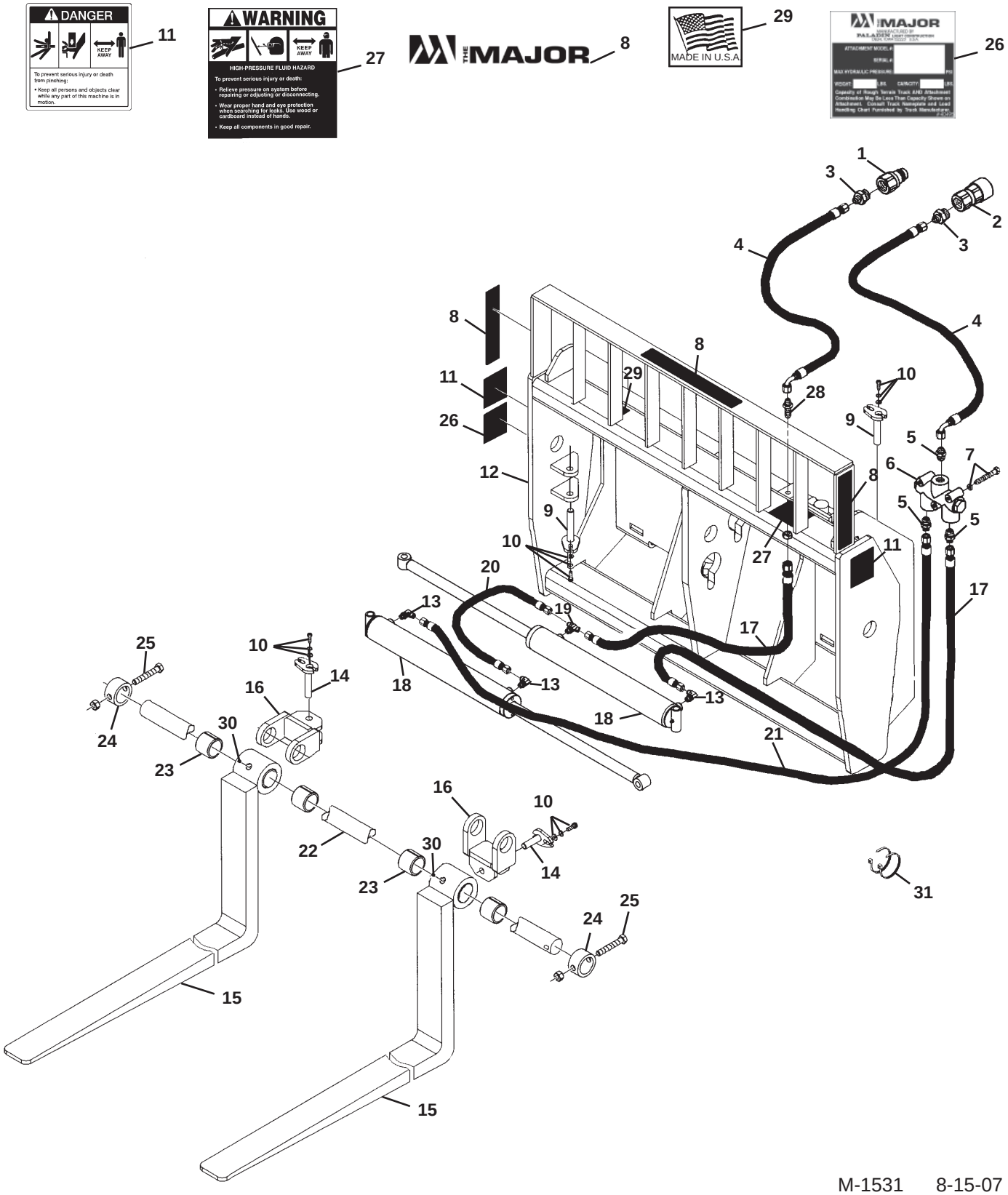

M-1531 8-15-07

FORK POSITIONER

50” WIDE (2" X 4" X 48” FORKS) - ASSEMBLY #13046

ITEM	QTY.	PART NO.	DESCRIPTION
1	1	22519	Male Quick Coupler
2	1	22518	Female Quick Coupler
3	2	30201	Straight Connector, 12MBo-6MJ
4	2	38348	Hose .38" X 48" 6FJX-6FJX90°
5	3	3125	Straight Connector, 6MJ-8MP
6	1	32360	Flow Divider Valve
7	3	1277	.31" UNF x 2.25" Hex Capscrew
	3	1502	.31" Lock Washer
8	2	40501	Major Logo, Small
	1	40502	Major Logo, Medium
9	2	14659	Pin, .75" x 4.13"
10	4	1043	.38" UNC x 1.00" Hex Capscrew
	4	1503	.38" Lock Washer
	4	1800	.38" Hard Flat Washer
11	2	40149	Pinch Point Danger Decal
12	1	109518	Fork Positioner Frame
13	3	3434	90° Elbow, 6MBo-6MJ
14	2	14554	Pin, .75" x 2.50"
15	2	109519	Fork Positioner Tine, 2" x 4" x 48"
16	2	109639	Clevis
17	2	37232	Hose .38" X 17.50" 6FJX-6FJX
18	2	109546	Cylinder Assembly
19	1	30137	Tee, 6MJ-6MJ-6MBo
20	1	38361	Hose .38" X 11" 6FJX-6FJX
21	1	38362	Hose .38" X 46" 6FJX-6FJX
22	1	18508	Fork Pin, 2.00" x 54.38"
23	4	31122	Bushing
24	2	18509	Lock Collar
25	2	1839	.62" UNC Deformed Lock Nut
	2	1124	.62" UNC x 4.00" Hex Capscrew
26	1	-----	Serial Number Identification Tag Location
27	1	40151	High Pressure Warning Decal
28	1	3297	Bulkhead Straight Connector, 6MJ-6MJ
29	1	4338	Made in USA Decal
30	2	6616	Grease Zerk
31	4	7104	Hose Tie

M-1532 8-15-07

CYLINDER ASSEMBLY

ASSEMBLY #88928

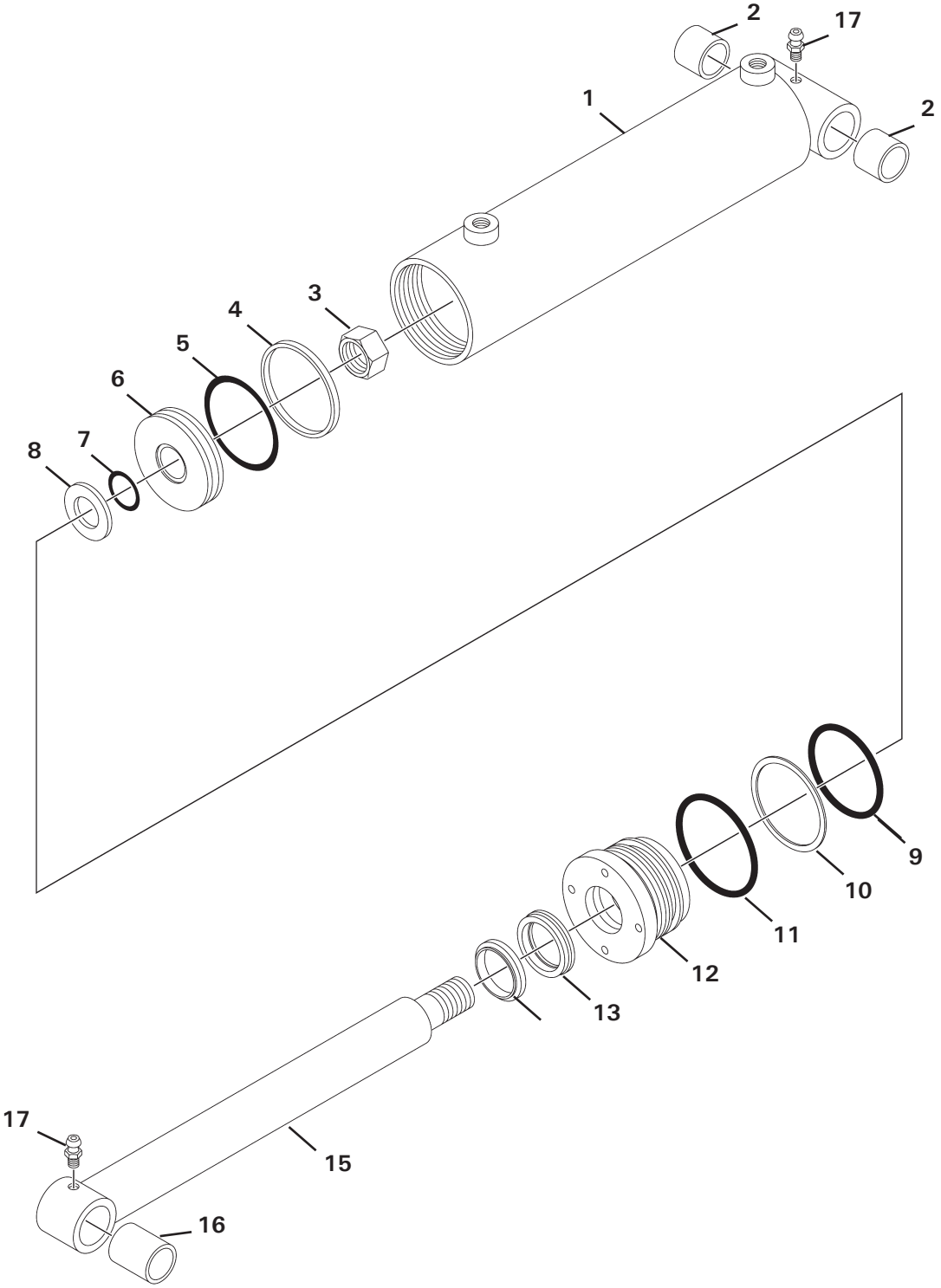

M-1029 9-13-05

CYLINDER ASSEMBLY

ASSEMBLY #88928

ITEM	QTY.	PART NO.	DESCRIPTION
1	1	88926	Cylinder Tube
2	2	88919	Bronze Bushing
3	1	1483	Hex Nut
4	1	4644*	Piston Ring
5	1	4645*	O-Ring
6	1	50252	Piston
7	1	4641*	O-Ring
8	1	5421	Washer
9	1	4509*	O-Ring
10	1	4510*	Back-Up Washer
11	1	45250*	O-Ring
12	1	77458	Cylinder Gland
13	1	45219*	Poly-Pak Seal
14	1	45389*	Rod Wiper
15	1	88927	Cylinder Rod
16	1	88918	Bronze Bushing
17	2	6616	Grease Zerk

NOTE: Seal Kit #45617 includes all parts marked with an asterisk (*). Parts are not sold separately.

CYLINDER ASSEMBLY

ASSEMBLY #100053

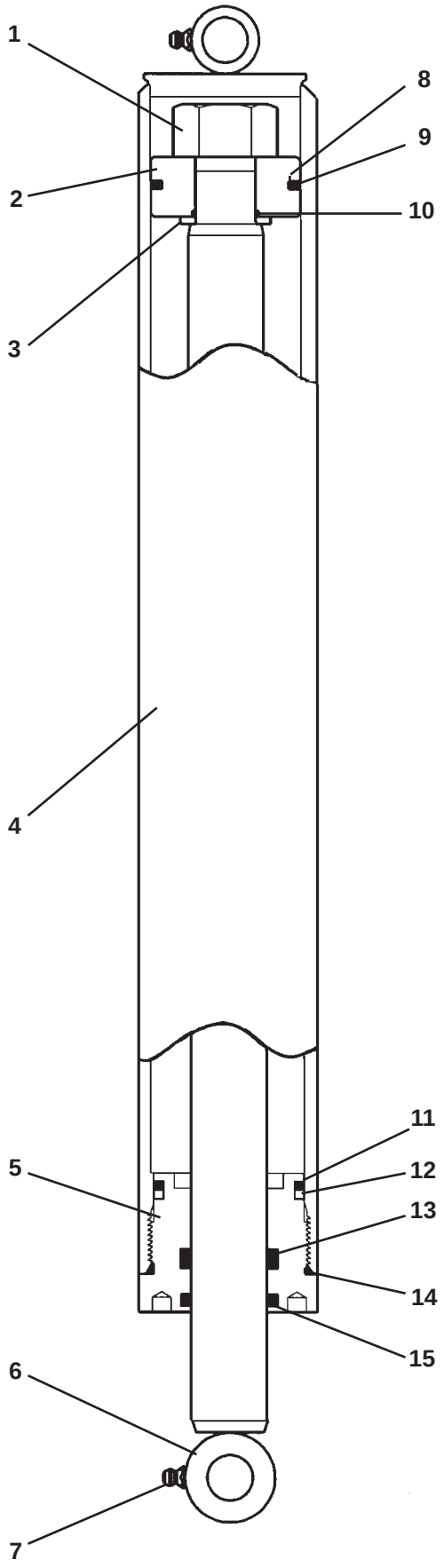

M-1012 8-23-05

CYLINDER ASSEMBLY

ASSEMBLY #100053

ITEM	QTY.	PART NO.	DESCRIPTION
1	1	1483	Hex Nut
2	1	50252	Piston
3	1	5421	Washer
4	1	18422	Cylinder Tube
5	1	77458	Cylinder Gland
6	1	18425	Cylinder Rod
7	2	6616	Grease Zerk
8	1	4645*	O-Ring
9	1	4644*	Piston Ring
10	1	4641*	O-Ring
11	1	4509*	O-Ring
12	1	4510*	Back-Up Washer
13	1	45219*	Poly-Pak Seal
14	1	45250*	O-Ring
15	1	45389*	Rod Wiper

NOTE: Seal Kit #45617 includes all parts marked with an asterisk (*). Parts are not sold separately.

CYLINDER ASSEMBLY

ASSEMBLY #109546

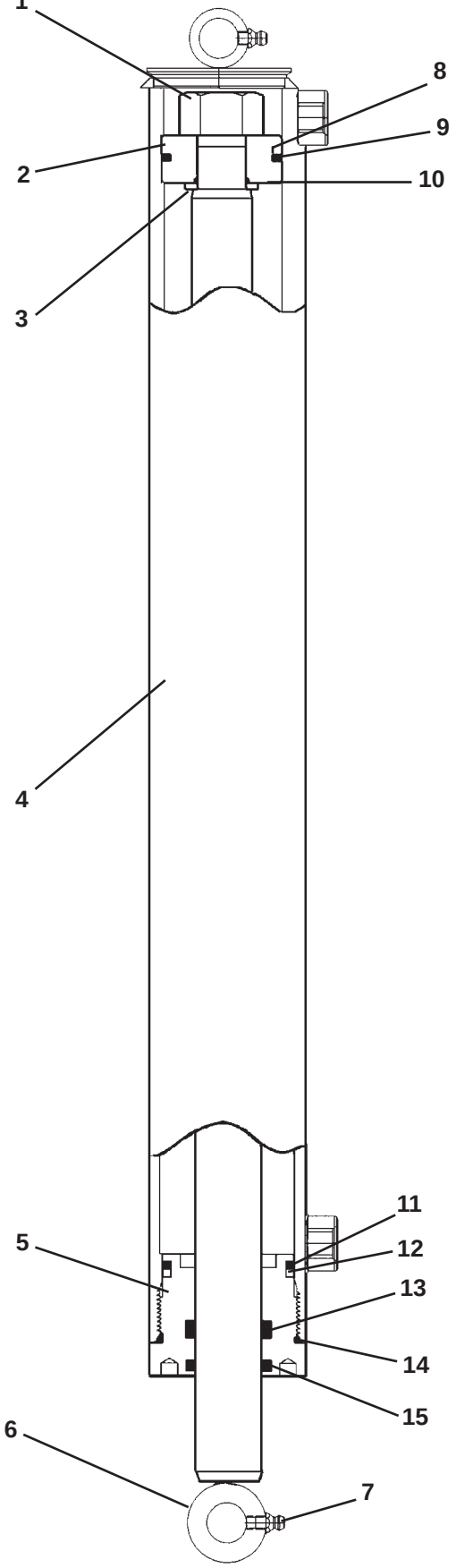

M-1535 6-27-07

CYLINDER ASSEMBLY

ASSEMBLY #109546

ITEM	QTY.	PART NO.	DESCRIPTION
1	1	1483	Hex Nut (Torque to 230-250 ft. lbs.)
2	1	50252	Piston
3	1	5421	Washer
4	1	109548	Cylinder Tube
5	1	77458	Cylinder Gland
6	1	109547	Cylinder Rod
7	2	6616	Grease Zerk
8	1	4645*	O-Ring
9	1	4644*	Piston Ring
10	1	4641*	O-Ring
11	1	4509*	O-Ring
12	1	4510*	Back-Up Washer
13	1	45219*	Poly-Pak Seal
14	1	45250*	O-Ring
15	1	45389*	Rod Wiper

NOTE: Seal Kit #45617 includes all parts marked with an asterisk (*). Parts are not sold separately.